Overview of the Joint Advance Missile Instrumentation(JAMI) Time Space Position Information(TSPI) Unit (JTU)

Steven Meyer
NAWCWD
Code52J300D
China Lake, CA 93555
(760) 939-6005
Steven.j.meyer@navy.mil

Outline

- Overview of the JAMI TSPI System
- JAMI System Requirements
- Overview of the JTU
- Overview of JAMI Ground Station
- Video of a Complete JAMI System
- Conclusions

System Overview

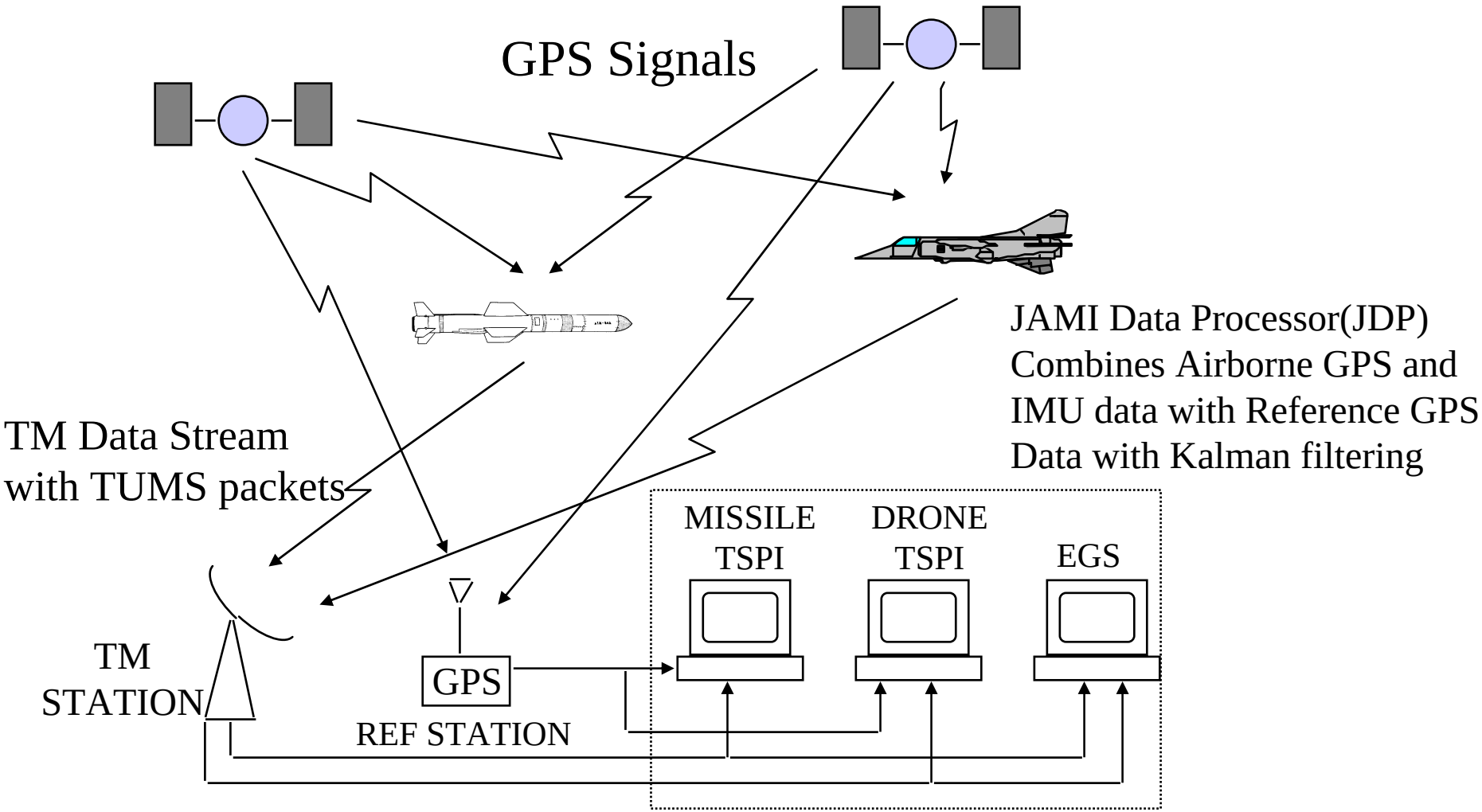

Requirements

T&E CAPABILITY REQUIREMENT	T&E CAPABILITY	TCRD THRESHOLD	COMPONENT VALIDATION
T&E TSPI	Position Accuracy	≤ 8 m	**< 2 m Horizontal (10)**
	Velocity Accuracy	≤ 1 m/sec	**< 1 m/s (6)**
	Attitude Accuracy	5 degrees	**< 4 deg (6)**
	Data Sample Rate	10 Hz min	**15.625 Hz (5) (7)**
	Acquisition time	≤ 3 sec	**< 2 sec (8) (4)**
Range Safety TSPI	Position Accuracy	≤ 80 m	**< 7 m Horizontal (5)(10)**
	Velocity Accuracy	≤ 10 m/sec	**< 1 m/s (9)**
	Attitude Accuracy	5 degrees	**< 10 deg (6)**
	Acquisition time	3 seconds	**<2 sec (8) (4)**

Notes: (1) NAWC CH-3119 JTU-II specification
(2) AMRAAM ICD 7030036
(3) JTU CDR 8 Dec 04
(4) Ceva GSU Final Performance Report 23 Dec 04
(5) GSU-II v2 GWEF Performance Report 6/13/04
(6) Test Bed #6 flight analysis report 3/2/05
(7) JTU Acceptance Test Report
(8) GPS Acquisition Test Report 6/13/05
(9) GSU 8003 Performance Report 7/28/05
(10) Test Bed Configuration 7 Report 2/2006

Requirements

T&E CAPABILITY REQUIREMENT	T&E CAPABILITY	TCRD THRESHOLD	COMPONENT VALIDATION
System	Number of Weapons	4	
	Number of Targets	4	
	Acceleration	40 G	**> 80 G (5)**
	Jerk	400 G/sec for 100 ms	**500 G/sec for 100 ms (9)**
	Airborne Volume	13 cu in	**(1) (3)**
	Velocity	Mach 3	**>M3 (5)**
	Altitude	50,000 ft	**100,000 ft (9)**
	Event Market Accuracy	1 us	**<1 us**

JTU Photo

JAMI TSPI Unit (JTU) Overview

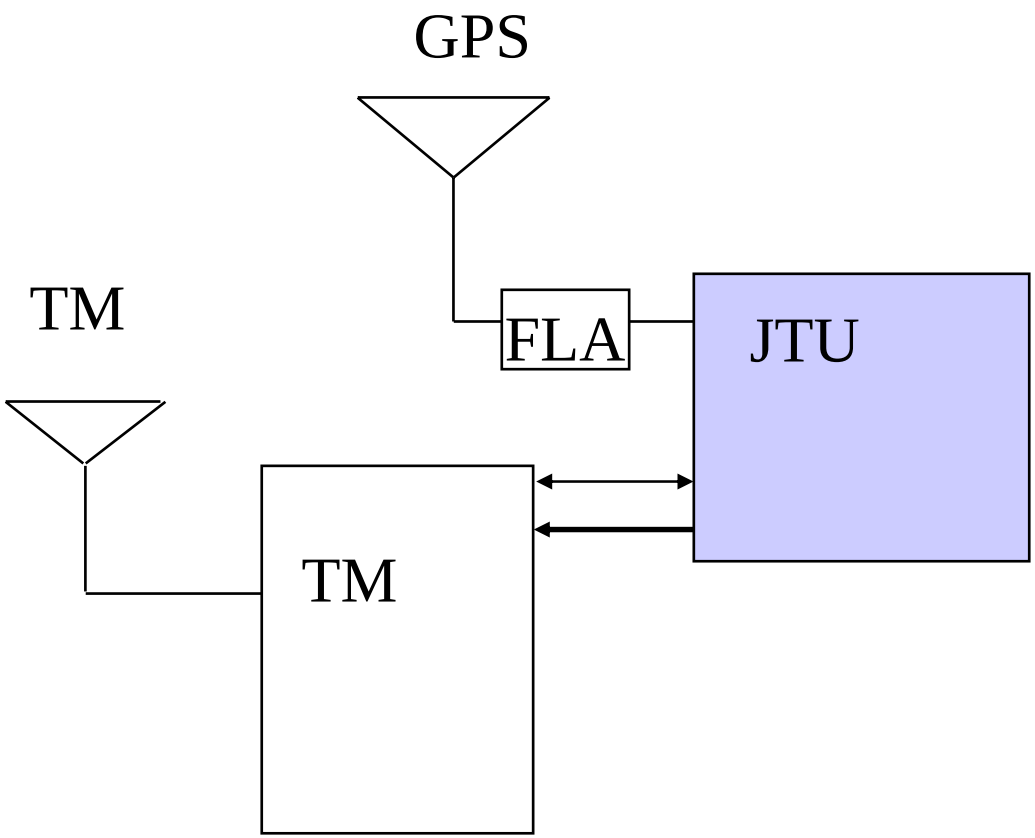

JTU Functions

- Provide GPS measurements/timing
  - L1 C/A code
  - Code tracking for real time
  - Carrier Phase data for post mission kinematic processing
  - 3 timing inputs to time tag events
- Inertial Measurements
  - IMU
  - An algorithm is used to process the raw IMU measurements
    - More robust
      - Can handle TM drop outs
    - Reduces TM data rate
      - Compression

TUMS Overview

- TUMS stands for Time, Space, Position Information (TSPI) Unit Message Structure.
- TUMS follows packet telemetry protocols as outlined in IRIG 106-01 Part II
- TUMS has GPS messages and processed IMU data.
  - A TUMS packet is formed when an epoch pulse is received from the GSU. This pulse corresponds with the time of validity of the GSU measurement of the GSU message within that TUMS packet.
- Defined in NAWC-CH 3132

TUMS Diagram

TUMS (**T**SPI **U**nit **M**essage **S**tructure)

(NOTE: BETWEEN EACH SECTION IS A CHECKSUM BYTE)

Type I:

Packet (optional)

Header	MACM	MATM	PVTM	IMU
6 Bytes	»184 Bytes	»18 Bytes	»30 Bytes	»346 Bytes

Type II:

Packet

Header	Vendor Defined Structure	IMU
6 Bytes	763 Bytes	»346 Bytes

DEFINITIONS: **MACM**- **M**issile **A**pplication **C**ondensed **M**essage

MATM- **M**issile **A**pplication **T**ime **M**essage

PVTM- **P**osition, **V**elocity, **T**ime **M**essage

IMU- **I**nertial **M**easurement **U**nit

JTU Block

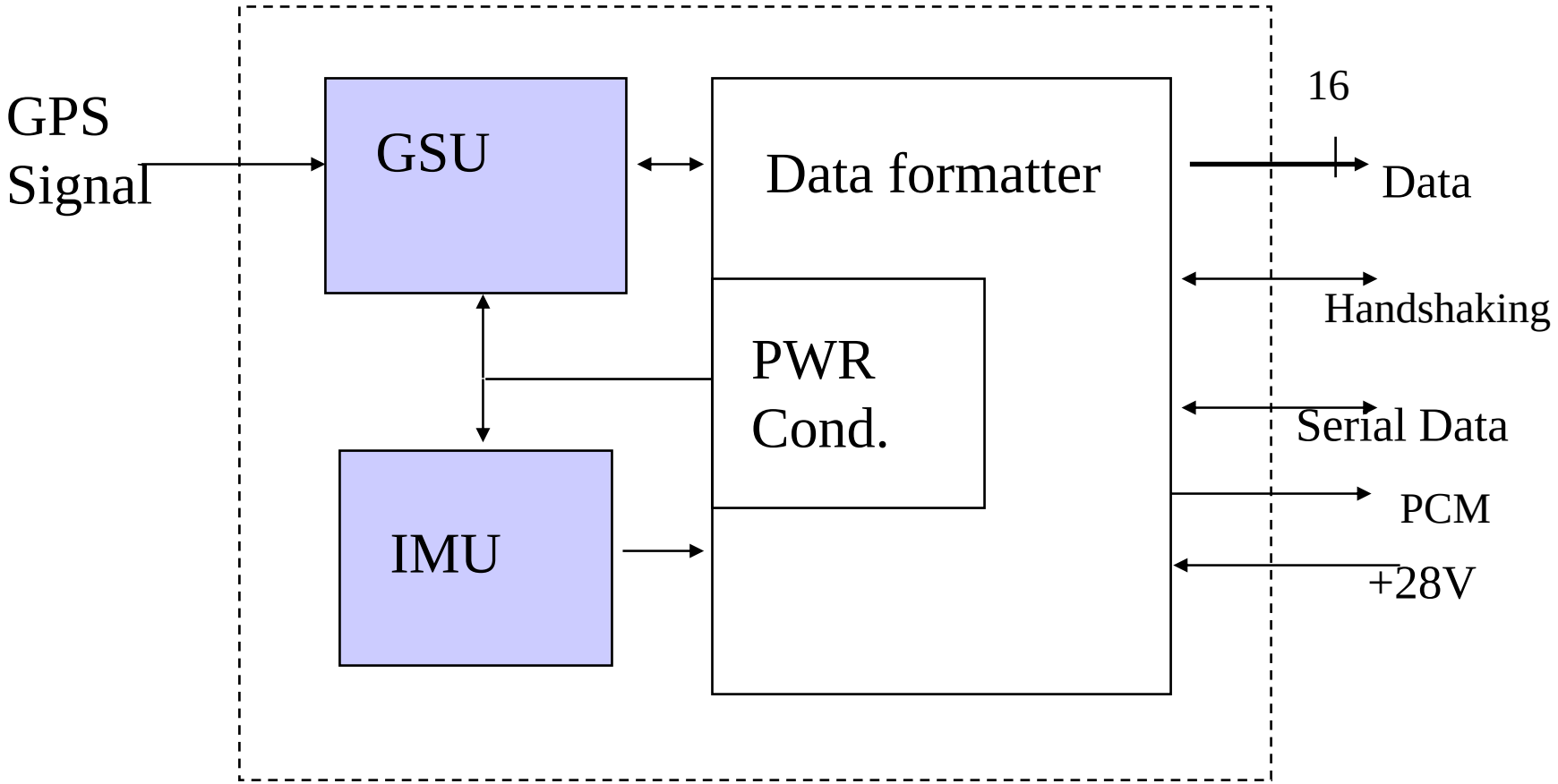
GPS
Signal
GSU
Data formatter
PWR
Cond.
IMU
16
Data
Handshaking
Serial Data
PCM
+28V

GPS Sensor Unit (GSU)

- Sensor Mode
  - High Dynamics (>50g)
  - Is a hybrid
    - Airborne part
    - Ground part
  - Requires additional Ground Processing
- Navigation Mode
  - GPS Receiver
  - Low Dynamics (< 25g)
  - Standard GPS data reduction

Inertial Measurement Unit (IMU)

- Purpose
  - Provide attitude
  - TSPI during short GPS outages (3 sec)
- Sensors used
  - Analog Devices ADXL250 accelerometers
  - Analog Devices ADXRS300 rate sensors
- Accuracy
  - +/- 0.05% of FS using a 64 point look up table

JTU Block

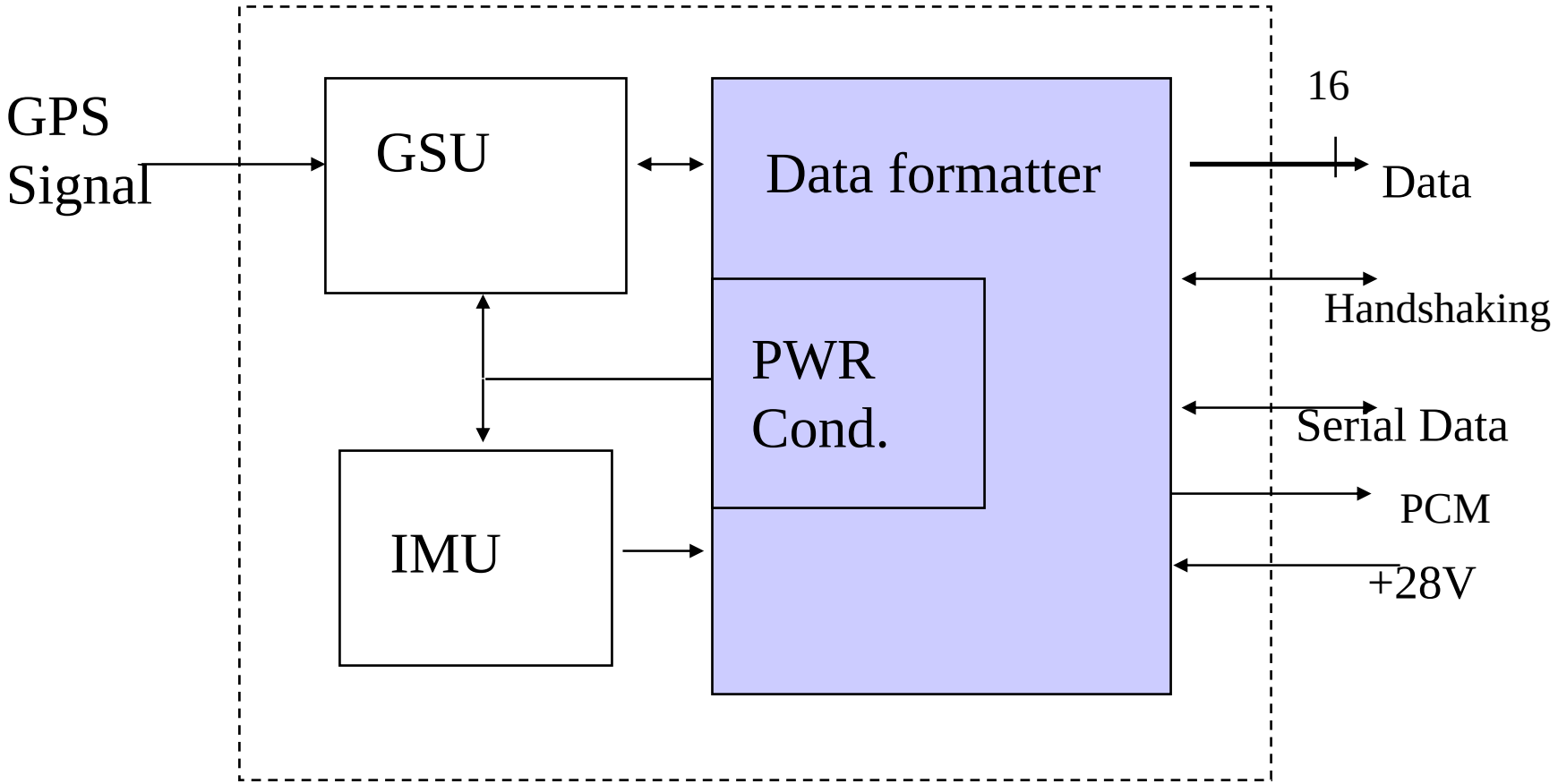
GPS
Signal
GSU
Data formatter
PWR
Cond.
IMU
16
Data
Handshaking
Serial Data
PCM
+28V

JTU Outputs

- Uses TPSI Unit Message Structure (TUMS)
  - Follows I-RIG 106 Part II (Packet Telemetry)
- Three output formats
  - RS-232 data stream (230 Kbaud)
  - PCM (IRIG-106 Part I)
    - RNRZ-L
    - Frame Syncs Added
    - 181 Kbits/sec
  - 16-bit parallel port (FIFO interface)
    - Block Transfer
    - Free Running

JAMI Equipment's Interfaces with the Range

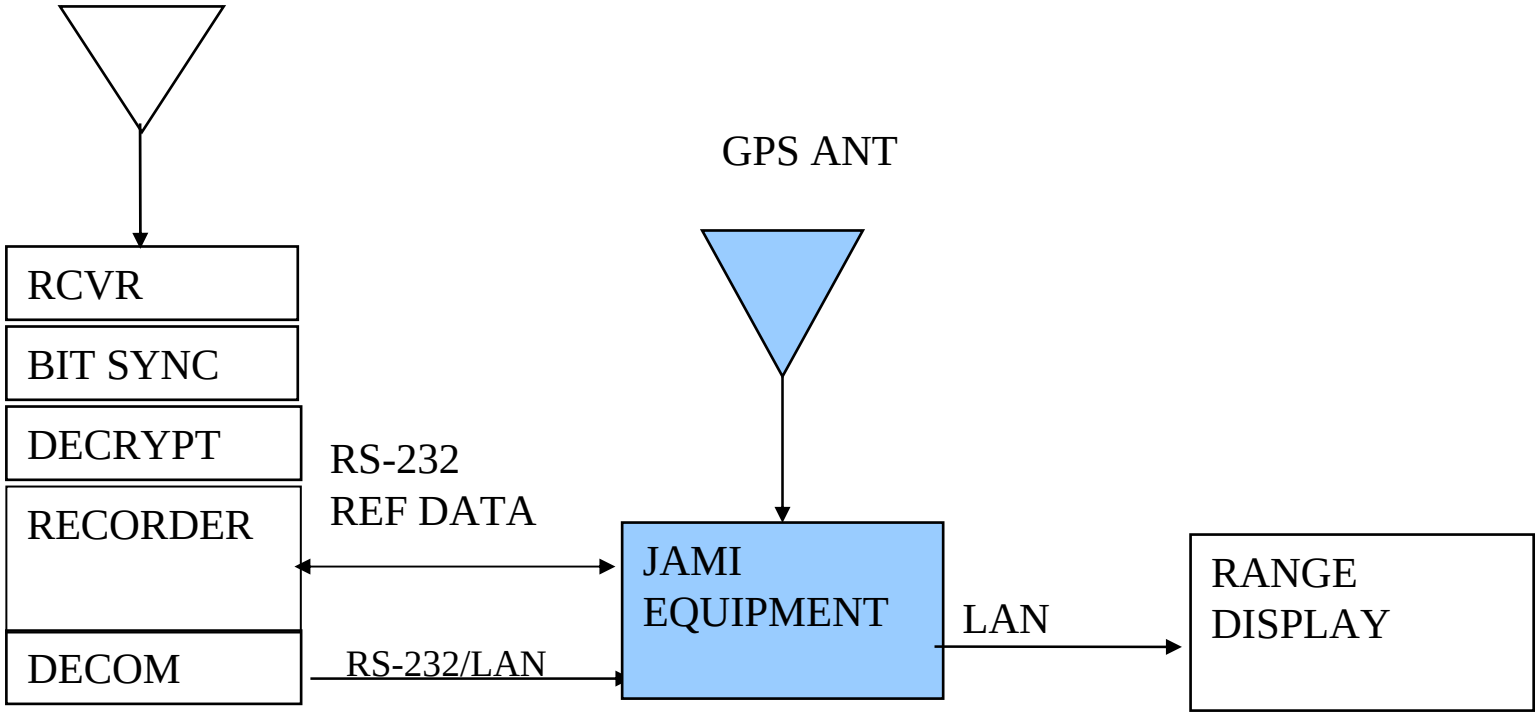

JAMI Hardware

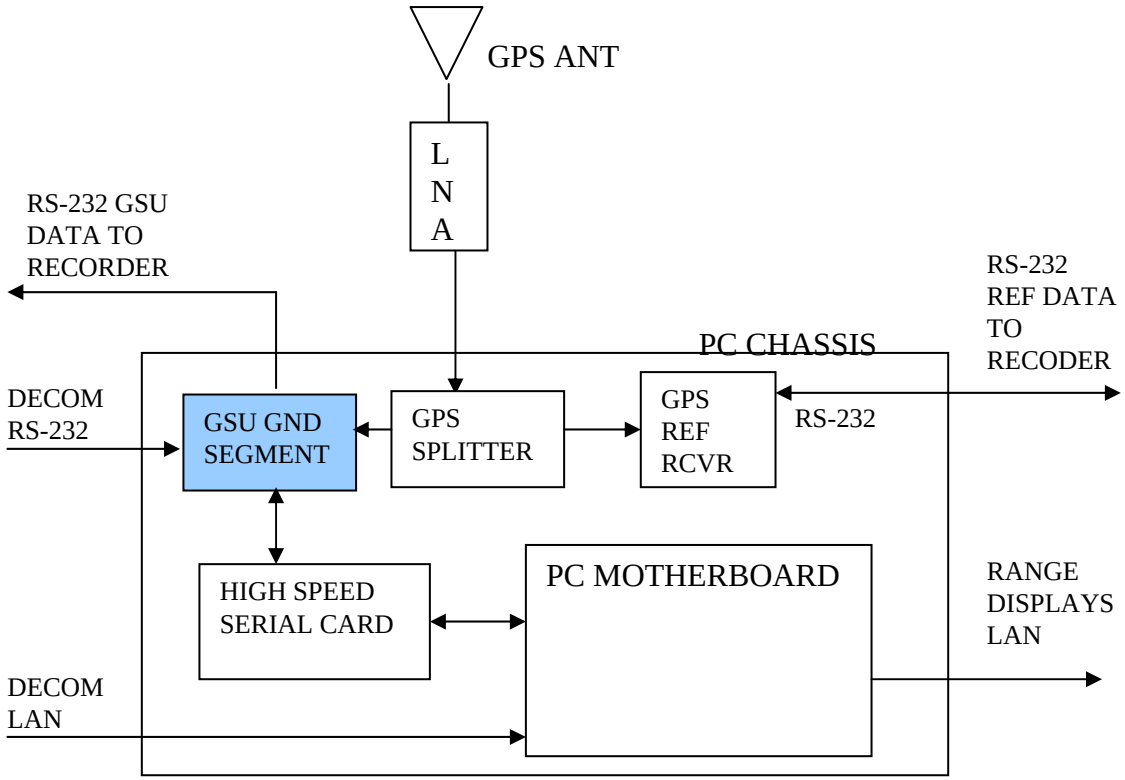

GSU Ground Segment

- Completes the GPS measurement data for the Sensor Mode
- Outputs TUMS Type 1 data for the JDP
- Has three components
  - Comms Engine
    - Handles the TUMS data from the Decom
    - Partitions the TUMS Type 2 message
    - Sends TUMS Type 1 to the JDP
  - Reference Receiver
    - Provides timing and differential corrections to Navigation Processor
  - Navigation processor
    - Processes GSU data from the TUMS type 2 message using the data provided by the reference receiver to provide real time GPS measurements for the TUMS Type 1 message

Software

- GSUview
  - Monitors Ground Segment
- MOSES Based Software
  - JDPCR3
    - Differential Corrections from Reference receiver
  - JDP/TSPI
    - Real time TSPI, Outputs TSPI to Range Displays
  - JDP/EGS (MOSES 7.0)
    - Post mission
      - Kinematic processing
      - End game scoring

JDP/TSPI

- Processes the TUMS data
  - Real time differentially corrected TSPI
  - Sends real time TSPI to the range display
  - Can handle up to eight players
- Archives Data
  - Incoming TUMS data
  - Trajectory data
    - Tab delimitered data sent to range display

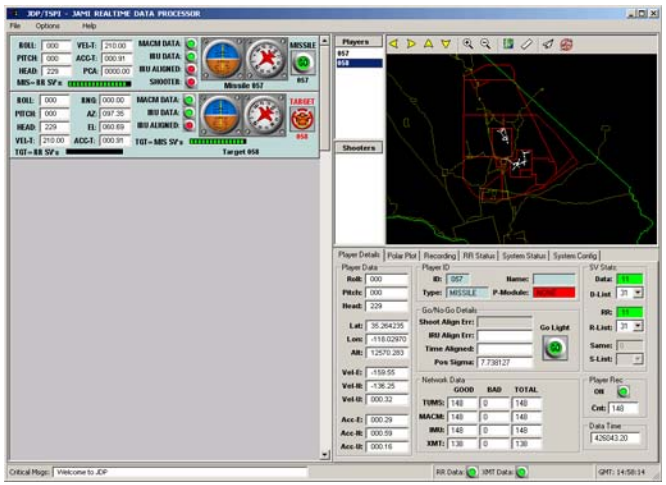

Launch Video

Conclusion

- The JTU will provide a real time GPS TSPI solution for missile and target platforms
- The JTU & JAMI Ground Station meet the TCRD requirements
- The JAMI TSPI System ready to be fielded