217-07

TELECOMMUNICATIONS
AND TIMING GROUP

RANGE TIMING ARCHITECTURE HANDBOOK

WHITE SANDS MISSILE RANGE
REAGAN TEST SITE
YUMA PROVING GROUND
DUGWAY PROVING GROUND
ABERDEEN TEST CENTER
NATIONAL TRAINING CENTER
ELECTRONIC PROVING GROUND
HIGH ENERGY LASER SYSTEMS TEST FACILITY

NAVAL AIR WARFARE CENTER WEAPONS DIVISION, PT. MUGU
NAVAL AIR WARFARE CENTER WEAPONS DIVISION, CHINA LAKE
NAVAL AIR WARFARE CENTER AIRCRAFT DIVISION, PATUXENT RIVER
NAVAL UNDERSEA WARFARE CENTER DIVISION, NEWPORT
PACIFIC MISSILE RANGE FACILITY
NAVAL UNDERSEA WARFARE CENTER DIVISION, KEYPORT

30TH SPACE WING
45TH SPACE WING
AIR FORCE FLIGHT TEST CENTER
AIR ARMAMENT CENTER
ARNOLD ENGINEERING DEVELOPMENT CENTER
BARRY M. GOLDWATER RANGE

NATIONAL NUCLEAR SECURITY ADMINISTRATION (NEVADA)

DISTRIBUTION A: APPROVED FOR PUBLIC RELEASE;
DISTRIBUTION IS UNLIMITED

This page intentionally left blank.

SPECIAL REPORT

RANGE TIMING ARCHITECTURE HANDBOOK

MAY 2007

Prepared by

TELECOMMUNICATIONS AND TIMING GROUP

(TIMING COMMITTEE)

Published by

Secretariat
Range Commanders Council
U.S. Army White Sands Missile Range,
New Mexico 88002-5110

This page intentionally left blank.

TABLE OF CONTENTS

LIST OF FIGURES iv
LIST OF TABLES iv
PREFACE v
ACRONYMS vii

CHAPTER 1: ACQUISITION AND PRECISE TIME AND TIME INTERVAL (PTTI) SOURCES 1-1
1.1 Introduction 1-1
1.2 Importance of Precise Timing Data 1-1
1.3 Global Positioning System (GPS) 1-2
1.4 Long Range Aid to Navigation (LORAN) 1-2
1.5 Two Way Time Transfer Method (TWTTM) 1-3
1.6 References for Chapter 1 1-6

CHAPTER 2: FREQUENCY STANDARDS 2-1
2.1 General 2-1
2.2 Parameters 2-1
2.3 Types of Frequency Standards 2-2

CHAPTER 3: TIME CODE GENERATORS 3-1
3.1 Introduction to Time Code Generators (TCGs) 3-1
3.2 Circuit Events Discussion 3-2
3.3 Conclusion 3-3

CHAPTER 4: TIMING TRANSMISSION/DISTRIBUTION 4-1
4.1 Introduction 4-1
4.2 Format 4-1
4.3 Level 4-1
4.4 Method of Transmission 4-1
4.5 References for Chapter 4 4-2

CHAPTER 5: END USERS 5-1

CHAPTER 6: MONITOR AND CONTROL 6-1
6.1 Precise Time and Time Interval (PTTI) Introduction 6-1
6.2 System Equipment 6-1
6.3 Monitor and Control Signals (MCSs) 6-2
6.4 Operations 6-2

CHAPTER 7: RESOURCES 7-1
7.1 Meetings 7-1
7.2 Training 7-1
7.3 Websites 7-1
7.4 Contacts 7-1
7.5 Reference Documents 7-2

GLOSSARY

LIST OF FIGURES

Figure 1-1. Static two-way time transfer. 1-4
Figure 3-1. Time code generator 3-1

LIST OF TABLES

Table 2-1. Frequency Standard Comparisons 2-3
Table 5-1. Typical End Users of Range Timing 5-2
Table 5-2. Inter-Range Instrumentation Group (IRIG) 200-04 Serial Code Formats..... 5-3

PREFACE

This document presents the results of Task TT-44 "Range Timing Architecture Handbook" for the Telecommunications and Timing Group (TTG) in the Range Commanders Council (RCC). The efforts of the Timing Committee members resulted in this applications handbook for use as a reference source that provides basic guidelines and concepts for the implementation of Range timing systems. The objectives of this document are to identify major subsystems of a Range time and time interval architecture and to identify alternative approaches for subsystem configurations.

The RCC gives special acknowledgement for production of this document to:

Task Chair: Mr. Chauncey Dunn
Member, Telecommunications and Timing Group (TTG)
45TH Space Wing
15245 Hangar Road,
Cape Canaveral Air Force Station (CCAFS), FL 32920
Phone: DSN: 467-9056 Comm: (321) 853-9056
Fax: DSN: 467-7174 Comm: (321) 853-7174
E-Mail: Chauncey.Dunn.ctr@patrick.af.mil

Past Chair: Mr. Rick Watkins
Past Member, Telecommunications and Timing Group (TTG)
Past Chair, Timing Committee
6066 Cedar Lane
Hill Air Force Base, UT 84056

Please direct any questions to:

Secretariat, Range Commanders Council
ATTN: CSTE-DTC-WS-RCC
100 Headquarters Avenue
White Sands Missile Range, New Mexico 88002-5110
Telephone: (505) 678-1107, DSN 258-1107
E-mail rcc@wsmr.army.mil

This page intentionally left blank.

ACRONYMS

Note: For further clarification, many of the acronyms are hyperlinked to the Glossary at the end of this handbook.

ADEV	Allan Deviation
AFB	Air Force Base
BIPM	Bureau International des Poids et Mesures
bps	bits-per-second
COTS	Commercial-Off-The-Shelf
DoD	Department of Defense
DST	Daylight Saving Time
FAST	Fly-Away Satellite Terminal
GHz	gigahertz
GMT	Greenwich Mean Time
GPS	Global Positioning System
GRI	Group Repetition Interval
HF	High Frequency
Hz	hertz
IOC	Initial Operational Capability
IRIG	Inter-Range Instrumentation Group
ITU	International Telecommunications Union
kHz	kilohertz
Kw	kilowatt
LF	Low Frequency
LORAN-C	Long Range Aid to Navigation
MC	Master Clock
MCS	Monitor and Control System
MDEV	Modified Allan Deviation
MHz	megahertz
MJD	Modified Julian Date
ms	millisecond
µsec	microsecond
mw	milliwatt
Mw	megawatt
NASA	National Aeronautics and Space Administration
NBS	National Bureau of Standards
NGA	National Geospatial-Intelligence Agency
ns	Nanosecond
NIST	National Institute of Standards and Technology
NRL	Naval Research Laboratory
NTP	Network Time Protocol
pps	pulse-per-second
ps	picosecond
PTTI	Precise Time and Time Interval
RCC	Range Commander's Council

Rms	root mean square
s	second
SATCOM	Satellite Communications
TAI	International Atomic Time
TBC	Time Based Communications
TCG	Time Code Generator
TCXO	Temperature-Compensated Crystal Oscillator
TSG	Time Signal Generator
TSPI	time-space position information
TTG	Telecommunications and Timing Group
TWSTT	Two-Way Satellite Time Transfer
TWSTTS	Two-Way Satellite Time Transfer System
TWTTM	Two-Way Time Transfer Method
USNO	United States Naval Observatory
UTC	Coordinated Universal Time
VCXO	Voltage-Controlled Crystal Oscillator
VHF	Very High Frequency
VSAT	Very Small Aperture Terminal
XO	Quartz Crystal Oscillator
Z	Zulu Time

CHAPTER 1

ACQUISITION AND PRECISE TIME AND TIME INTERVAL (PTTI) SOURCES

1.1 Introduction

Scientists, engineers, and others working with time and frequency equipment often need to synchronize local timing signals or syntonize locally produced frequency signals with accepted national or international standards. In other cases, it may be sufficient to compare the local signals with reference standards in order to determine any differences. Since the International Telecommunications Unions (ITU) and other scientific and technical organizations have recommended Coordinated Universal Time (UTC) as the appropriate international reference for time and frequency for most applications, it is important for technical personnel working with time and frequency equipment to be aware of the various sources that exist for precise UTC information and the means for gaining convenient access to them.
In selecting one or more of the available sources for UTC time and/or frequency for a given application, users need to consider a variety of factors and their relative importance. These include the following:

a. The availability of each service at the user's particular geographical location.
b. Whether the application requires a "time" or "frequency" reference (or both).
c. The accuracies needed.
d. The need for continuous availability of the reference, as opposed to periodic or occasional availability.
e. The relative importance of automatic operation.
f. The user costs for equipment and operation.

Since no single source for UTC is optimum in all respects, thus compromises and trade-offs must be made when analyzing these factors and the available services for a given situation.

1.2 Importance of Precise Timing Data

Why is precise timing data necessary? Many aspects of our everyday life require precise time synchronization. Time synchronization is required when two or more locations are communicating with each other. High-speed communication systems, television and radio broadcasts, cell phones and pagers, and power grid control are just a few examples. The aerospace and space industries require precise time data to accurately navigate and control flight vehicles. Additionally, the Department of Defense (DoD) uses precise time data to allow intelligent armament systems to precisely locate and impact targets. DoD Test and Training Ranges use precise time data to time tag telemetry, time-space position information (TSPI), video and film, radar, remote control, etc.

1.3 Global Positioning System (GPS)

The Global Positioning Service (GPS) is a radio navigation system that is available worldwide. It consists of 24 satellites in orbit at approximately 11,000 nautical miles above the earth. GPS permits land, sea, and airborne users to determine their three-dimensional position and velocity, and time 24 hours a day, with a precision and accuracy far better than other radio navigation systems previously available. The basic concept of operation for GPS is based on satellite ranging. A minimum of four satellites is required (in view of the GPS receiver). Each GPS satellite transmits position and time data on two frequencies: 1575.42 megahertz (MHz) and 1227.6 MHz. The C/A (course acquisition) code is available on the L1 frequency and the (precision) P-code is available on both L1 and L2. The various satellites all transmit on the same frequencies, L1 and L2, but with individual code assignments. The Y-code is used in place of the P-code whenever the anti-spoofing (A-S) mode of operation is activated. Only authorized users have access to the Y-code, primarily the U.S. Military and those authorized on a case-by-case basis. A new signal for civilian use, often referred to as L5, is expected to be available, with initial operational capability (IOC) in 2010. Since GPS is a satellite-based system, its signals are low power and subject to intentional, unintentional, and atmospheric interference. Accurate time transfer capability of 25-300 nanoseconds is typical for GPS time systems.

1.4 Long Range Aid to Navigation (LORAN)

Unlike GPS, LORAN-C is a ground-based, low frequency, high-power radio navigation system. This system transmits precisely timed 100 kilohertz (kHz) pulses from which users can derive information on position and time, and operates in a band reserved for marine radio navigation. However, this system is not available worldwide. As of 2000, there are 20 transmitting chains operating. Each chain typically consists of 3, 4, 5, or 6 stations. One station is designated as a Master (M), the other stations are designated secondary (V, W, X, Y, and Z). These stations are typically hundreds of nautical miles apart (in some cases more than 1,000 nautical miles). Transmit power levels can range from as low as 400 kilowatt (KW) to as high as 1.5 megawatts (Mw).

The basic LORAN-C concept of operation is based on the principle of Group Repetition Interval (GRI). GRI is based on several factors, the distance between the master and secondary stations, the number of secondary stations, and geography, to name a few. Each chain GRI is unique. The transmission time of each station is therefore precisely known. By measuring the small difference in arrival times of the pulses for each Master-Secondary pair, location and time information can be derived.

One result of the Volpe GPS Vulnerability Report was that GPS needed a completely independent backup system especially in critical safety of life applications. LORAN-C was identified as having the greatest potential of being that system. LORAN-C stations are currently being modernized and modifications are being studied to make LORAN-C suitable for all transportation uses. Currently, typical timing accuracies using LORAN-C are 0.1 to 10 microseconds, but should improve to 50 to 500 nanoseconds with enhanced Loran C.

1.5 Two Way Time Transfer Method (TWTTM)

TWTTM is accomplished by having each of two time standards send a one pulse-per-second (pps) signal to the other time standard over a communications circuit. The transmission medium introduces delays, but this delay must be nearly reciprocal, e.g., the delay is the same in both directions and thus cancels out to 0. Each user measures the time interval between the transmission of its local 1 pps and the time it receives the remote facility's 1 pps signal by typically using a time interval counter. The true time offsets of the two time standards can be measured very precisely (~0.2 nanoseconds) and accurately (~ 1.0 nanosecond).
The Two-Way Satellite Time Transfer (TWSTT) system employed by the USNO uses geostationary communications satellites for the communications circuit. Currently commercial Ku-band satellite and X-band (DSCS) satellite links are possible. The USNO, Washington D.C. site includes two 4.57-meter Ku-band satellite earth station terminals, one 1.8-meter Ku band Fly-Away Satellite Terminal (FAST), five Very Small Aperture Terminals (VSATs), a mobile 1.8-meter SUV based VSAT, one 2.4-meter X-band terminal, one 3.8-meter X-band terminal, and TimeTech Satre modems. The modem is a very important piece of equipment. It codes/decodes the spread-spectrum signals of the 1 pps, which are transmitted and received over the satellite communications circuit.

Two-way time transfer has been used for years over satellite links between static locations. Each location simultaneously transmits a time code through a satellite communications channel. The time between the two clocks is determined by combining the measurements made at each end of the link. When performed using a geo-synchronous satellite as the relay, the propagation delay from one side to the other is determined by the range from each transmitter through the transponder and then down to the receiver. In order for this delay to cancel sufficiently to measure the relative clock offset, the propagation delay difference between the two paths must be small. This translates to a requirement that the radial satellite motion (to each transmitter/receiver pair) must be minimal over the measurement interval. For the case of two static nodes on the earth communicating through a geosynchronous satellite, this is true to the sub-nanosecond level for simultaneous transmission; simultaneity need only be maintained at tens of microseconds for standard orbits (Reference 1d).
The propagation delay of the satellite communications channel cancels and the measurement need only be adjusted for measurement effects and differences in equipment delay.

For the case of two static nodes on the earth communicating through a geosynchronous satellite, this is true to the sub-nanosecond level for simultaneous transmission; simultaneity need only be maintained at tens of microseconds for standard orbits (see Reference 1d). The propagation delay of the satellite communications channel cancels and the measurement need only be adjusted for measurement effects and differences in equipment delay.

The two-way equations for the static case involve two measurements (made at each side of the link) between two clocks. The measurement configuration for the static two-way calculation (satellite relay case) is depicted in Figure 1-1.

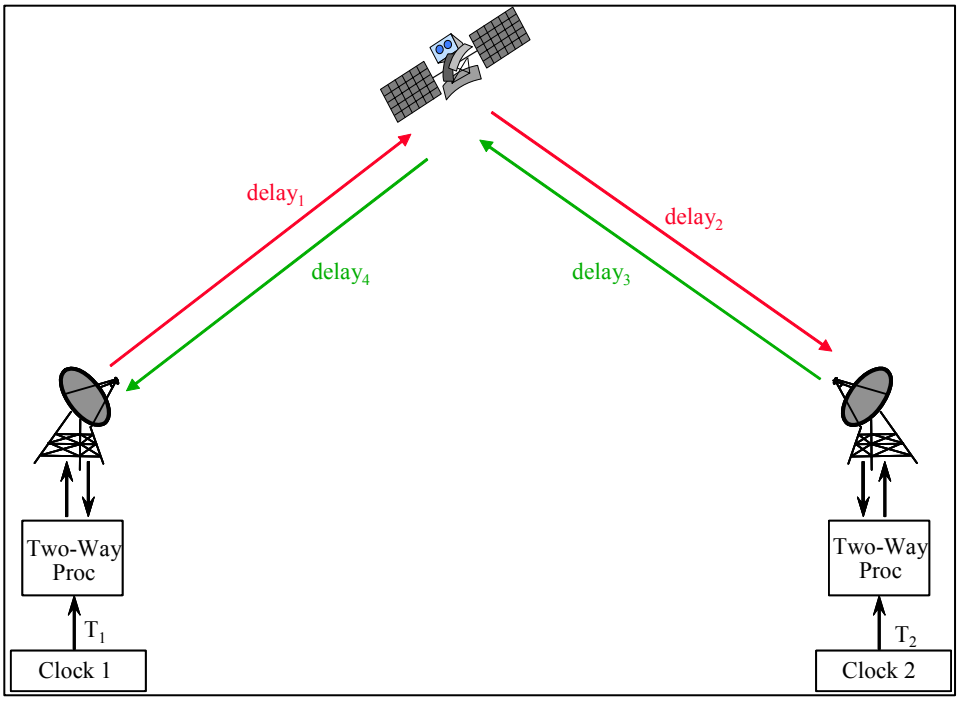

Figure 1-1. Static two-way time transfer.

The measurements (for Figure 2-1) that are made by the two-way processor at each end of the link are:

$$Meas1 = T1 - (T2 + delay3 + delay4 + Sagnac12) \quad \text{(Eqn 1-1)}$$
$$Meas2 = T2 - (T1 + delay1 + delay2 + Sagnac21) \quad \text{(Eqn 1-2)}$$

Where,

T1 = Time of clock 1.
T2 = Time of clock 2.
delay1 = delay from Clock 1 site to satellite during time of transmission.
delay2 = delay from satellite to Clock 2 site during time of transmission.
delay3 = delay from Clock 2 site to satellite during time of transmission.
delay4 = delay from satellite to Clock 1 site during time of transmission.
Sagnac12 = Sagnac time-of-flight correction from node 1 to node 2.
Sagnac21 = Sagnac time-of-flight correction from node 2 to node 1.

Subtracting Equation 1 from Equation 2 yields,

$$Meas2 - Meas1 = 2*(T2 - T1) + (delay1 - delay4) + (delay2 - delay3) + \Delta Sagnac \qquad \text{(Eqn 1-3)}$$

Where,

$$\Delta Sagnac = Sagnac21 - Sagnac12$$

and

$$T2 - T1 = .5*[(Meas2 - Meas1) - (delay1 - delay4) - (delay2 - delay3) + \Delta Sagnac] \qquad \text{(Eqn 1-4)}$$

In the case of static time transfer, delay1≈delay4 and, delay2≈delay3 over the measurement interval. In this case, (4) reduces to

$$T2 - T1 = .5*[(Meas2 - Meas1) + \Delta Sagnac]$$
(Eqn 1-5)

For the static case, ΔSagnac is a constant.

Two-way time transfer is not limited to satellite implementations. The technique can be successfully implemented over any communications link with a synchronous physical layer (such as coaxial cable, fiber optic cable, microwave links etc). Two-way can also be integrated with mission communications links to provide timing as an ancillary service of a communications systems. This technique is called Time Based Communications (TBC) and involves provide precision time synchronization in the background of an active data channel (one that is being used for data communication). This allows clocks at two ends of a communications link to be precisely synchronized without fielding an independent timing system. Time-based communications (TBC) is a generic technology in which two-way time transfer is accomplished using a communications channel that meets a few basic requirements (Reference 1a). Implementation of these concepts has been accomplished over fiber (Reference 1b) and satellite channels (Reference 1a, Reference 1c, and Reference 1d) and line-of-sight links with excellent results.

1.6 References for Chapter 1

1a. T.P. Celano, S. P. Francis, G. A. Gifford, "Continuous Satellite Two-Way Time Transfer using Commercial Modems", Proceedings of the 2000 IEEE/EIA International Frequency Control Symposium & Exhibition pp 607-611, June 2000

1b. Calhoun, M., Kuhnle, P., Sydnor, R., Stein, S. and Gifford, A., "Precision Time and Frequency Transfer Utilizing SONET OC-3, Proceedings of the 28th Precise Time and Time Interval Conference, November 1996.

1c. T.P. Celano, S. P. Francis, G. A. Gifford, B. J. Ramsey, T. L. Erickson, "Results of a Continuous Transatlantic Two-Way Satellite Time Transfer Test Using Commercial Modems", Proceedings of the 32nd Precise Time and Time Interval Conference, December, 2000

1d. D. W. Hanson, "Fundamentals of Two-Way Time Transfers By Satellite", Proceedings of the 43rd Annual Symposium on Frequency Control, 1989.

CHAPTER 2

FREQUENCY STANDARDS

2.1 General

Frequency standards (oscillators) are the time-base devices for Precise Time and Time Interval (PTTI) systems. PTTI frequency standards can be free-running devices, or can be controlled externally (i.e., voltage controlled oscillators, disciplined frequency standards, etc.).

2.2 Parameters

There are several parameters to consider when selecting a frequency standard for a PTTI system application. These include the desired frequency output(s) and output signal level(s) as well as frequency accuracy, aging, drift, and stability.

2.2.1 Frequency Outputs. Most commercial-off-the-shelf (COTS) frequency standards developed for PTTI applications output one or more of the following:

a. 100 KHz
b. 1 MHz
c. 5 MHz
d. 10 MHz

Most COTS frequency standards output frequency signals with amplitudes one to three volts root-mean-squared (RMS) into a 50 ohm resistive load.

2.2.2 Frequency Accuracy. Frequency accuracy is the degree to which a frequency standard's frequency corresponds to an accepted standard. The national frequency standard maintained at the National Institute of Standards and Technology (NIST) is the accepted standard for the United States. Frequency accuracy is measured as a ratio of the frequency offset of the unit under test versus the accepted standard. Examples of expressions of frequency accuracy are $5x10^{-11}$ and $1.6x10^{-8}$.

2.2.3 Frequency Aging. Frequency aging is the systemic change in a frequency standard's frequency with time due to internal changes in the oscillator.

2.2.4 Frequency Drift. Frequency drift is the linear (first order) component change in the frequency standard's frequency over time. Oscillator aging and changes in external factors cause frequency drift to the oscillator (i.e., environment or power supply). Frequency drift is measured as the change in frequency over a period of time. An example of drift is 1x10-9 per day.

2.2.5 Frequency Stability. Frequency stability is the statistical estimate of fluctuations of the frequency over a given time interval. Short-term stability is often used to describe the frequency stability for averaging times of 0.1 to 100 seconds. Long-term stability is used to describe averaging times of 100 seconds to one day.

2.2.6 Frequency Accuracy and Frequency Stability. The concepts of frequency accuracy and frequency stability are often not well understood. An oscillator can be very accurate but have high instability. In this case at any given moment, the oscillator's frequency could be slightly inaccurate. However for long time periods, its average frequency would be highly accurate. Conversely, an oscillator could be slightly inaccurate and very stable. In this case, one would have high confidence in knowledge of the instantaneous frequency, even if it were not at the preferred nominal frequency.

An oscillator with lesser frequency accuracy and better frequency stability is often preferred over one with better frequency accuracy and lesser frequency stability, because it is relatively easy to compensate for accuracy errors and more difficult to compensate for random frequency fluctuations.

2.3 Types of Frequency Standards

Several types of frequency standards are discussed in the following paragraphs and a summary comparison can be seen at Table 2-1.

2.3.1 Quartz (Crystal). Crystalline quartz has good mechanical and chemical stability and small elastic-hysteresis. These properties, plus the excellent short-term stabilities and relatively small costs of crystalline quartz oscillators, makes them very useful in frequency standards. An inherent characteristic of crystal oscillators is that their resonant frequency changes with age. This "aging rate" is nearly constant over the life of the crystal. And once the aging rate is known, it is relatively easy to compensate for it.

Crystal Oscillator performances are enhanced by various methods. Temperature controls, ovenizing, and double ovenizing crystals are techniques to lessen the effects of temperature on the oscillators. Also voltage can be applied to a crystal oscillator to discipline it to maintain frequency accuracy. Most high- accuracy frequency standards employ voltage-controlled oscillators in their output stages to improve their short-term stability.

2.3.2 Rubidium. Rubidium oscillators use passive resonators to stabilize a quartz oscillator. The Rubidium standard is based on the hyperfine transition in Rubidium 87 gases. Rubidium standards exhibit very low drift rates and good short-term stability over the finite life of the oscillator's lamp and chamber.

2.3.3 Cesium Beam. Cesium beam frequency standards are used when high precision and accuracy in time and frequency are required. They are the only time and frequency device to be considered a "primary standard" because it exhibits accurate frequency without calibration. The second is defined as 9.192631770 billion hyperfine level transitions of the Cesium 133 atom. Cesium beam frequency standards are found in most laboratories where national standards for time and frequency are maintained.

The Cesium beam frequency standard uses the quantum effects of the hyperfine level transitions of Cesium 133 atoms. These very precisely frequent transitions arise from electron-spin and nuclear-spin interactions, which are relatively insensitive to external influences such as electric and magnetic fields.

2.3.4 Hydrogen Maser. The Hydrogen maser is the most stable of known frequency sources for averaging times of a few seconds to 100,000 seconds. However, Hydrogen masers are quite large (generally have a footprint a little larger than a standard equipment rack, and stand close to five feet tall) and relatively expensive, so these devices are found more often in laboratories and generally are not found in field environments.

2.3.5 Frequency Standard Comparisons. A comparison of the types of frequency standards and the parameters discussed above is provided at Table 2-1.

TABLE 2-1. FREQUENCY STANDARD COMPARISONS

	Crystal	**Rubidium**	**Cesium Beam**	**Hydrogen Maser**
Accuracy	10-8	10-10	10-11 – 10-12	<10-11
Aging/Day	10-11	10-12 – 10-13	None	<10-14
Temp Coeff / deg C @25C	10-11	10-12	10-13 - <10-14	10-14
Stability (Tau = 1 sec)	1x10-12	3x10-11	3x10-11 8.5x10-14	1x10-13
Stability (Tau = 1 day)	1x10-10	1x10-12	5x10-14	5x10-15
Weight (lbs)	.5	4 – 20	30 – 50	>200
Price ($K)	.5	3.5	40	>200

Note: Values in this table are rough-order-of-magnitude estimates.

This page intentionally left blank.

CHAPTER 3

TIME CODE GENERATORS

3.1 Introduction to Time Code Generators (TCGs)

A TCG is an electronic device that can generate a time code in a prescribed format. TCGs are available as commercial items, and are produced in many different configurations with various input and output capabilities. The time code format can be user-defined, but in most government applications the format is generally chosen from the Range Commander's Council (RCC) Inter-Range Instrumentation Group (IRIG) Standards. The most popular time code format is the IRIG B, which expresses time in day of year, hour, minutes, and seconds for data time tagging and display purposes.

A TCG model and configuration depends on the user's application such as an airborne TCG, a portable or "flying" clock application, or a facility rack-mounted TCG. In this discussion the TCG will be refined to the time generation signal as applied to a master time station. This type of TCG is usually a rack-mounted unit that may include sub-system circuitry other than time code generation circuits. There are basically two types of time code generators, a basic time code generator, and the synchronized time code generator. This discussion will start with the basic TCG.

A block diagram of the component sub-circuits that form the basic time code generator is shown at Figure 3-1.

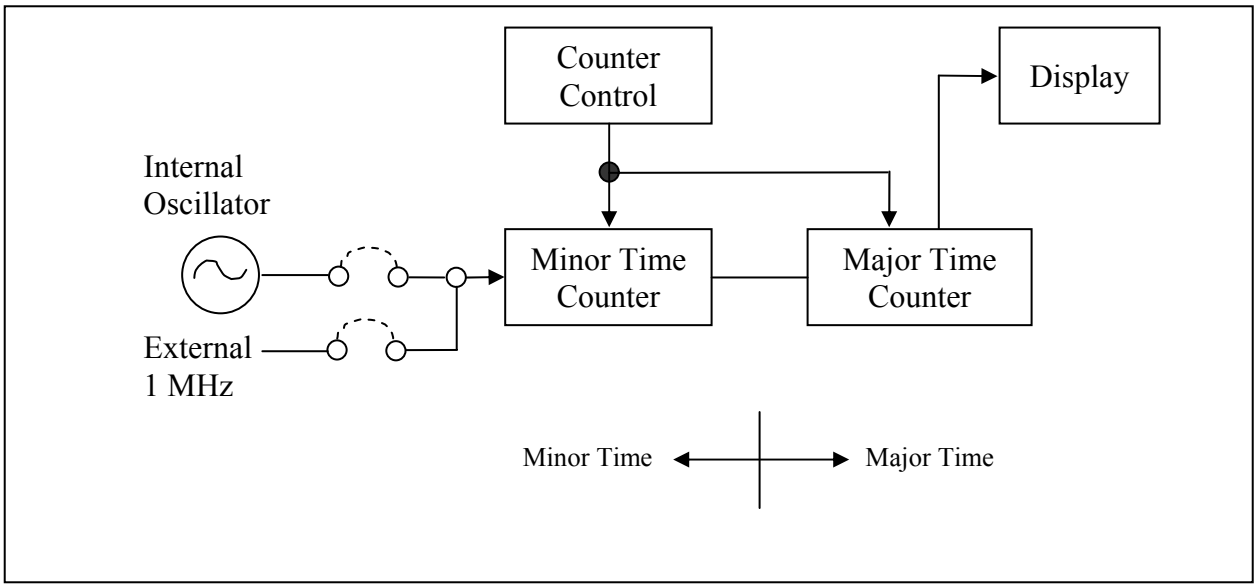

Figure 3-1. Time code generator.

All time code generators must have a time base clock. An oscillator is a source for a time base clock. There is usually a choice available for the source as depicted in Figure 3-1. In most cases a time code generator will have an embedded oscillator circuit, which provides a near consistent frequency. The frequency cycles are used as the base clock. An optional external frequency input is usually available and will supersede the internal frequency source when used. An example of an external frequency source is a Cesium beam frequency standard. While an external frequency standard may provide several frequencies to choose from, the time code generator is normally looking for a 1MHz signal. This signal is passed to the Minor Time Counter.

The Minor Time Counter module divides the frequency source and develops the scan terms and rates required to develop serial time code formats. It also divides the signal down to one pulse per second (1 pps), which is used to update the Major Time Counter.
The Major Time Counter further divides the 1 pps signal, which is permuted to count in the format of the time code (usually seconds, minutes, hours, and day of year (IRIG B)). This counter also stores the accumulated time count. The accumulated time count is the basis for most of the outputs supplied by the unit.

The Counter Control provides a means to enter the time-of-day into the Major Time Counter. It is also used to manually synchronize the Major Time Counter and start the time code generator to clocking.

The Display section takes the Major Time Counter data and provides a visual display of the accumulated time for the benefit of the user.

This concludes the discussion of the TCG modules as depicted in Figure 3-1. What are not shown in Figure 3-1 are the signal outputs from the TCG.

3.2 Circuit Events Discussion

The following paragraphs provide a broad discussion on circuit events of a serial time code encoder as it applies to a TCG output and the synchronization circuit events for a synchronized time code generator. The reader is encouraged to refer to the specific model and manufacturer's instruction manual for detailed description of these functions.

3.2.1 TCG Outputs. TCGs can be configured to provide various signal outputs, but are generally in the form of serial and/or parallel time code formats, pulse trains, and frequency outputs. The following discussion will only address the serial time code outputs, typical of many TCGs. Generally, in a master Range timing station, the main output from the TCG will be an IRIG time format such as IRIG B. The circuitry that provides the output is known as a serial time code encoder. This encoder has several circuit modules consisting of a time code scanner, frame interval generator, and a pulse-width code generator.

The time code scanner scans the contents of the Major Time Counter to develop a serial pulse train in the format desired such as IRIG B. The scanner consists of gates (gates may be “OR,” “AND,” and “NAND”) controlled by terms (more gates) from a frame interval generator.

A gate connects each bit of the Major Time Counter to a pulse-width code generator. Each gate is sequentially turned on at the correct time according to the predetermined sequence. The pulse-width generator inserts the marker and position identifiers at pre-determined positions in the code format, and provides the correct pulse-width as defined for the code. The encoder output is a direct current (dc) envelope of the desired format. This signal can be used to modulate a carrier and transport the time signal to a time distribution system.

3.2.2 Synchronized Time Code Generators. The above paragraphs describe the basic early style generator that requires manual input of the time into the Major Time Counter. The second type is the synchronized time code generator. This generator can be used in two ways, either in the "GEN mode," or in the "SYNC GEN mode." As a synchronized generator the unit will accept as its input a standard IRIG format modulated code. The unit automatically synchronizes to the input code and provides a front panel display, serial pulse trains, and optional digital outputs. The synchronization system consists of several circuits. In general, the input IRIG signal is decoded to a binary counter and the signal is fed to a load logic circuit, sync circuit, phase comparator/propagation comparator circuit, and the Minor Time Counter circuit. The phase comparator/propagation comparator circuit compares the phase difference between the incoming binary on time pulse and the internal time base clock from the Minor Time Counter. A difference signal is then developed and provided to the advance/retard circuit. This circuit provides a correction signal back to the Minor Time Counter and adjusts the 1 pps output signal to the on time pulse of the input IRIG code. The load logic circuit pre-loads the decoded input binary time information into the Major Time Counter.

Once the TCG is synchronized to the incoming IRIG code, the TCG reverts to the GEN mode and keeps time based on its own internal time base frequency source. The synchronization circuits are locked out and used to monitor the input code for time differences. Since all frequency sources will drift over time, the TCG output time signal will drift and become out of phase with the incoming time code. In general most SYNC TCG will automatically re-synchronize the internal time base to the incoming time code. The amount of drift that is allowed before a re-synchronization event takes place is usually selectable by the user.

3.3 Conclusion

This concludes the discussion of the basic operation and purpose of time code generators. The reader is encouraged to review the manufacturer manuals for further in-depth information on the theory and detailed circuit functions of time code generators. There are several commercial manufacturers of time code generators and other timing equipment, and most of these vendors maintain an Internet web site that provides detailed information on their products and timing information. The Range Commanders Council (RCC) publishes several IRIG Standards with various time code formats. These Standards are available through the RCC Secretariat. Instructions to obtain Standards can be found on the RCC web site, which resides on the RCC web site (https://wsmrc2vger.wsmr.army.mil/rcc/index.htm).

This page intentionally left blank.

CHAPTER 4

TIMING TRANSMISSION/DISTRIBUTION

4.1 Introduction

Timing transmission/distribution is the means of ensuring that the properly formatted timing signal is available throughout the network architecture. This can be as complex as the distribution of several differently formatted time codes, or as simple as having all communications sub-networks clocked at the same average rate, which is traceable to Coordinated Universal Time (UTC). There are many different timing formats. These range from simple sine and square wave signals at varying frequencies (1 MHz, 5 MHz, and 10 MHz), to 1 pulse-per-second (1 pps), to various Inter-Range Instrumentation Group (IRIG) serial time codes. There are several IRIG time codes. Some of the more commonly used formats are A, B, G, and H.

4.2 Format

Prior to the transmission/distribution of time, it is essential that the desired format be output from the time code generator. For the purpose of this handbook, IRIG B120 format will be used as the example. IRIG B120 is probably the most widely used time code for timing synchronization. IRIG B120 is a 74-bit time code that contains:

a. 30 bits of BCD time-of-year information in days, hours, minutes, and seconds.
b. 17 bits of SB seconds-of day.
c. 27 control bits.

4.3 Level

Once the format is established, the signal level must be set. For IRIG B120, a nominal level for transmission is a 3 Volts peak-to-peak (3 Vpp). Depending on the time code generator being used, distribution/level amplifiers may or may not be necessary. There are many off-the-shelf products that accept the 3 Vpp timing signals.

4.4 Method of Transmission

There are many methods of distribution for time code. For instance, if timing is to be distributed over a wide area where very little infrastructure is present, an over-the-air transmission method may be appropriate. A very high frequency (VHF) timing transmitter/receiver system is a relatively low cost and generally reliable solution. An elevated (mountain top) location with good line of site characteristics is desirable for the transmitter, and each location requiring timing will need a receiver. If timing is to be distributed over a wide area with good communications infrastructure, then a single channel over a mulitplexed system may be appropriate. For example, the WESCOM channel bank system has a single channel card

(p/n 3680-01) specifically designed for Transmitting IRIG B120. The transmit side uses a PG5-T, and the receive location uses a PG5-R card.

If the timing is to be distributed over a more concentrated area where fiber is present, it can be distributed directly using several off-the-shelf products. One such product is the TrueTime FOL-100 module which, using either single or multimode fiber, takes an IRIG B120 input and transports it directly to the item requiring timing.

When planning a time signal distribution system, consideration should be given to transmission delays.

4.5 References for Chapter 4

a. RCC Document 200-04 - IRIG Serial Time Code Formats
b. RCC Document 204-96 - Instrumentation Timing Systems
c. National Institute of Standards and Technology (NIST) 2004 Workshop on Synchronization in Telecommunications Systems

CHAPTER 5

END USERS

Users of timing may be organizations such as the National Aeronautics and Space Administration (NASA) and the National Geospatial-Intelligence Agency (NGA), programs such as the Minuteman III and Peacekeeper, and test Ranges such as Eglin Air Force Base (EAFB) and Vandenberg AFB (VAFB). Timing users also include Range systems such as radars, telemetry, and timing equipment (e.g., time code generators). End users will utilize timing for accurate time annotation, precise frequency reference, and/or general operational time display and procedural use (clock displays, etc.). The application will dictate the required accuracy. For many operational uses, accuracy to a few milliseconds (ms) is adequate. Instrumentation may require accuracies below 50 nanoseconds (ns) when referenced to the United States Naval Observatory (USNO) DoD Master Clock.

Since this document is a Range timing handbook, it is appropriate to address end users in terms of Range systems typically found on a test Range. To this end, information identifying typical DoD Range systems, how timing is provided to those Range systems, the system's data products, and timing's contribution to that data product is provided in Table 5-1.

Range systems use timing for the correlation and synchronization of command and destruct, instrumentation, frequency management, radar, telemetry, etc. Individual pieces of equipment used by these Range systems include data recorders, strip charts, printers, magnetic tapes recorders, film cameras, video cameras, GPS receivers, modems, fiber-optic systems, multi-function generators, and a wide variety of other displays and indicators. Table 5-1 provides a list of typical Range end users (Range systems). Though not complete, the list identifies many systems found on the Ranges today.

The timing signal is provided to the end user either by RF transmission, microwave, copper wire, or fiber. Though not all formats are shown on the table, formats include Inter-Range Instrumentation Group (IRIG) codes A, B, D, E, H, & G, which are pulse (dc) or amplitude modulated sine waves (Mod). There are also many reference frequencies, such as 1 pps, 1 KHz, 5 KHz, 10 KHz, 1 MHz, 5 MHz, and 10 MHz.

Table 5-2 provides a quick reference of the RCC Document 200-04 (IRIG Serial Time Code Formats) often used by the end user. There are parallel code formats in RCC Document 205-87 (IRIG Standard: Parallel Binary and Parallel Binary Coded Decimal Time Code Formats).

TABLE 5-1. TYPICAL END USERS OF RANGE TIMING			
Range Systems (Typical)	**Timing Input to System (Format)**	**Range System's Data Product**	**Timing's Contribution to Data Product**
Radars	Parallel Binary Coded Decimal (BCD) time	Time, Space and Position Information (TSPI)	Time stamp of azimuth (AZ), elevation (EL), and Ranging info
	IRIG A dc	Position data	Time stamp of AZ, EL and Ranging info
	IRIG B MOD	UTC Time Displays, Video Time Inserter	Time Display, Time Stamp of Radar Video
	IRIG H MOD	Position Data	Time stamp of AZ and EL; 100 pps
	IRIG H dc	Position Data	Time stamp of AZ and EL; 1 pps
	10 pps	Rate Sync For TSPI	Rate Time Stamp For TSPI
	40 pps	Rate Sync For TSPI	Rate Time Stamp For TSPI
	100 pps	Rate Sync For TSPI	Rate Time Stamp For TSPI
	1 pps, 1K pps	Rate For Synchronizing Radar Video Trackers	Synchronization of Video Trackers
Cinetheodolites	IRIG B MOD	Position data	Time stamp of AZ, EL
	IRIG B dc	Position data	Time stamp of AZ, EL data on film
	IRIG A dc	Event Occurrence	Time Stamp Of Event
	1 pps, 30 pps	Rate At Which Time Is Stamped With Position	Synchronize Rate; Time Stamp For Film And Video TSPI
Central Control Facilities	IRIG B MOD	Time Event Data	Time stamp for audio during operations
Telemetry	IRIG B MOD	Time Event Data	Time stamp for data tape
	IRIG A MOD	Time Event Data	Time stamp for data tape
	IRIG H MOD	Time Event Data	Time stamp for data tape
High speed video	IRIG B MOD	Time Event Data	Time stamp of event
(Freq management)	IRIG B MOD	Frequency Spectrum Analysis	Time stamp analyzer picture
Station clock	1 pps	Error Analysis and Microstepper Info	Maintain accuracy of remote station/site clock

TABLE 5-2. INTER-RANGE INSTRUMENTATION GROUP (IRIG) 200-04 SERIAL CODE FORMATS					
Format	**Bit Rate**	**Bits**	**FM Rate**	**Modulation**	**Resolution**
A	1k pps	78	0.1 s	10 kHz	1 ms
B	100 pps	74	1.0 s	1 kHz	10 ms
D	1 ppm	25	1 h	100 kHz	1 m
E	10 pps	71	10 s	1 kHz	0.1 s
G	10k pps	74	10 ms	100 kHz	0.1 s
H	1 pps	32	1 m	1 kHz	1 s

This page intentionally left blank.

CHAPTER 6

MONITOR AND CONTROL

6.1 Precise Time and Time Interval (PTTI) Introduction

A PTTI system may include a central timing facility/station clock (master clock) and a number of remote/site clocks, and a monitor/control system. A PTTI system is one that outputs precise time-of-year and time interval data to users and user equipment. Time-of-year data generally consists of Inter-Range Instrumentation Group (IRIG) serial time codes. An IRIG serial time code is encoded with the current year, day, hour, minute, and seconds and can have straight binary seconds and Control functions. This is referred to as Coordinated Universal Time (UTC), although also referred to as Greenwich Mean Time (GMT) or Zulu time. Time interval data generally consists of reference frequencies, repetition rates, or clock rates. Reference frequencies such as 100 kHz, 1 MHz, or 5 MHz consist of a frequency stable continuous sinusoid waves commonly used to discipline external oscillators and/or align radio frequency equipment. Repetition rates are periodic electrical pulses (e.g. 1 pps, 10 pps, etc) commonly used to mark periodic events and synchronize functions. Clock rates (e.g... 2400 bits per second (bps), 9600 BPS, T-1/T-2 Framed clock signals, etc.) are commonly used to coordinate or clock communication circuits.

The goal of a PTTI system is to provide all users year, time-of-year (TOY) and time interval data synchronized to within a range of 50 nanoseconds to one millisecond of the Department of Defense (DoD) U.S. Naval Observatory (USNO) Master Clock in accordance with specific Range contractual requirements.

6.2 System Equipment

6.2.1 Station Clock. A typical station clock is a PTTI system that maintains its own timing reference. Station clocks provide system redundancy and time averaging by using multiple primary frequency standards and are steered by periodically comparing clock time with external sources. Examples of external sources include the Two Way Satellite Time Transfer System (TWSTTS), Global Positioning System (GPS), LORAN-C, and portable clocks. Most often, these external sources are highly correlated to the DoD Master Clock, and their time accuracy errors are well known.

6.2.2 Remote or Site Clock. A typical site clock is a PTTI system that is kept on-time by continuously synchronizing to an external source such as a distributed time code or GPS. Site clocks are generally disciplined by an IRIG serial time code, normally IRIG B120 or IRIG A130, generated from a station clock. Each site clock must be adjusted to compensate for the propagation (i.e., the time it takes the disciplining signal to travel from the station clock to the site clock) delay in the disciplining signal. Site clocks also maintain a disciplined local oscillator such as a voltage controlled crystal oscillator (VCXO) or temperature controlled crystal oscillator (TCXO) that can flywheel in the absence of a synchronizing source. This local oscillator, when not disciplined, is generally less accurate than the disciplining source.

Therefore site clock performance is frequently non-compliant with required time and frequency accuracy specifications soon after the synchronizing/disciplining signal is lost.

6.2.3 PTTI Monitor and Control System (MCS). Many PTTI MCSs monitor both local and remote PTTI devices to determine health and status of the station and site clocks, and individual equipment types that make up the clocks. PTTI MCSs can also generate commands to offset time and frequency products generated by the station and site clocks. PTTI MCSs can be inter-networked or intra-networked allowing for remote control capability and the sharing of information with other Range PTTI devices.

6.3 Monitor and Control Signals (MCSs)

6.3.1 (One) Pulse Per Second (pps). Typical PTTI MCSs utilize 1 pps time interval measurements to make precise time comparisons between timing devices. These comparisons are used to compare time synchronization accuracies, and to determine health and status of the remote site clock equipment.

6.3.2 Inter-Range Instrumentation Group (IRIG) Time Codes. Typical PTTI MCSs utilize IRIG Serial Time Codes to time-tag (i.e. time stamp) time comparison data to facilitate determining relative clock drift rates, which ultimately can be used to develop commands to correct clocks (i.e. control clocks). These comparisons verify time synchronization performance, and health and status of the remote site clocks.

6.4 Operations

6.4.1 General Capabilities of a PTTI MCS. PTTI MCSs monitor the time synchronization of PTTI station/site clock equipment by making time interval measurements among timekeeping devices (i.e. Cesium beam frequency standards, time signal generators, etc.) and time transfer devices (i.e. GPS, LORAN-C, Two-way Time Transfer Method (TWTTM), portable clocks, etc.). PTTI MCSs may also analyze collected data to determine and initiate control commands to steerable clock equipment (i.e. microphase steppers, time signal generators, etc). PTTI MCSs should be designed to issue only infrequent, small magnitude control commands to precision clock instrumentation once a quiescent time scale has be achieved. Experience gained at national timekeeping laboratories reveals that frequent and/or large corrections to precise station and site clock equipment is often detrimental to precise timekeeping. Typically Cesium beam frequency standard microphase steppers should not be adjusted by more than $1x10^{-13}$ once a week, when trying to maintain time accuracy of +/- 1 microsecond to the Department of Defense Master Clock (DoD MC).

6.4.2 Typical Station Clock Personnel Duties.

a. Maintain all PTTI Station Clock equipment in accordance with local system operating procedures (SOPs).
b. Maintain a PTTI station log book, which will include the following at a minimum:
   (1) Daily log (noteworthy events, measurements, etc.).
   (2) Portable clock visits.
   (3) Portable clock report dates.
   (4) Manual measurements/adjustments.

6.4.3 Restart of a PTTI Station Clock. Some PTTI station clocks are provided with a battery backup system and should not be deliberately shut down, except in the most unusual circumstances.

Upon restarting the PTTI Station Clock, verify that the frequency standards are reset and operating properly. Verify proper distribution of the basic system frequencies. GPS receiver(s) should reacquire signal and data lock after a power up in accordance with vendor specifications. Verify that the GPS receiver parameters are correct. This should provide a synchronization source of less than +/- 500 nanoseconds to the USNO-DoD master clock.

Setup and slew the time signal generators to the best available reference and verify all required outputs. Re-check all receiver parameters and individual delay values to provide absolute confidence that the system is once again back in total synchronization with the USNO DoD Master Clock of less than one microsecond.

This page intentionally left blank.

CHAPTER 7

RESOURCES

7.1 Meetings

a. Precise Time and Time Interval Systems and Applications Meeting (PTTI) (http://tycho.usno.navy.mil/ptti.html).
b. IEEE UFFC Frequency Control Symposium (www.ieee-uffc.org/fc).
c. Institute of Navigation (ION) (www.ion.org).
d. International LORAN Association (ILA) (http://www.loran.org/).
e. Measurement Science Conference (MSC) (http://www.msc-conf.com/msc/index.html).
f. European Frequency and Time Forum (EFTF)
g. EuromicroConference on Real Time Systems (ECRTS) (http://ecrts06.tudos.org/)

7.2 Training

a. Navtech Seminars (www.navtechgps.com).
   - Held throughout the year in various locations and in conjunction with ION GNSS meeting.
b. National Institute of Standards and Technology (NIST) Time and Frequency Seminars (www.boulder.nist.gov/timefreq/seminars).
   - Held yearly (June) in Boulder, Colorado.
c. NIST Time and Frequency Measurements & Applications.
   - Held in conjunction with the MSC meeting.
d. PTTI Tutorials – (http://tycho.usno.navy.mil/ptti.html).
   - Held in conjunction with the PTTI meeting.

7.3 Websites

a. U.S. Naval Observatory, http://www.usno.navy.mil
b. U.S. Naval Research Laboratory, http://www.nrl.navy.mil/
c. National Institute of Standards and Technology (NIST), www.boulder.nist.gov

7.4 Contacts

a. U.S. Naval Observatory, RCC Associate Member
   - POC: Ms. Francine Vannicola, Vannicola.Francine@usno.navy.mil
b. U.S. Naval Research Laboratory, RCC Associate Member
   - POC: Mr. Jay Oaks, oaks@nrl.navy.mil

7.5 Reference Documents

a.	RCC 200-04	IRIG Serial Time Code Formats
b.	RCC 204-96	Instrumentation Timing Systems
c.	RCC 209-90	Event Count Status Code Formats
d.	RCC 215-96	Asynchronous ASCII Event Count Status Codes
e.	NBS 559	Time and Frequency User's Manual, NBS Special Bulletin
f.	NAVOBSY 81	Operating Procedures: PTTI Equipment, NAVOBSY
g.	HP5071A	Operating and Programming Manual
h.	SSD-DTTM001	Two Way Satellite Time Transfer (TWSTT) Manual

GLOSSARY

An extended glossary can be found on the Internet at http://tf.nist.gov/general/glossary.htm. See RCC Telecommunications and Timing Group IRIG Standard 214-06.

Accuracy: Accuracy is the degree of conformity of a measured or calculated value to its definition. Accuracy is related to the offset from an ideal value. In the world of time and frequency, accuracy is used to refer to the time offset or frequency offset of a device. For example, time offset is the difference between a measured on-time pulse and an ideal on-time pulse that coincides exactly with UTC. Frequency offset is the difference between a measured frequency and an ideal frequency with zero uncertainty. This ideal frequency is called the nominal frequency.

Aging: Change in frequency with time due to internal changes in an oscillator. Aging is usually a nearly linear change in the resonance frequency that can be either positive or negative, and occasionally, a reversal in direction of aging occurs. Aging occurs even when factors external to the oscillator, such as environment and power supply, are kept constant. Aging has many possible causes, including a buildup of foreign material on the crystal, changes in the oscillator circuitry, or changes in the quartz material or crystal structure.

Allan Deviation: A non-classical statistic used to estimate stability. This statistic is sometimes called the Allan variance, but since it is the square root of the variance, its proper name is the Allan deviation. The equation for the Allan deviation is:

$$\sigma_y(\tau) = \sqrt{\frac{1}{2(M-1)} \sum_{i=1}^{M-1} (y_{i+1} - y_i)^2}$$

where y_i is a set of frequency offset measurements that consists of individual measurements, y1, y2, y3, and so on; M is the number of values in the y^i series, and the data are equally spaced in segments τ (Tau) seconds long. Or

$$\sigma_y(\tau) = \sqrt{\frac{1}{2(N-2)\tau^2} \sum_{i=1}^{N-2} [x_{i+2} - 2x_{i+1} + x_i]^2}$$

where xi is a series of phase measurements in time units that consists of individual measurements, x1, x2, x3, and so on, N is the number of values in the xi series, and the data are equally spaced in segments τ (Tau) seconds long.

Atomic Time Scale (TA): An atomic time scale is based on an atomic definition of the second. Elapsed time is measured by counting cycles of a frequency locked to an atomic or molecular transition. Atomic time scales differ from the earlier astronomical time scales, which define the second based on the rotation of the Earth on its axis. Coordinated Universal Time (UTC) is an atomic time scale, since it defines the second based on the transitions of the cesium atom.

Bureau International des Poids et Mesures (BIPM): The BIPM (International Bureau of Weights and Measures) is located near Paris, France. The task of the BIPM is to ensure worldwide uniformity of measurements and their traceability to the International System of Units (SI). The BIPM averages data from about 50 laboratories to produce a time scale called International Atomic Time (TAI). When corrected for leap seconds, TAI becomes Coordinated Universal Time (UTC), or the true international time scale. The BIPM publishes the time offset or difference of each laboratory's version of UTC relative to the international average.

Carrier Frequency: The base frequency of a transmitted electromagnetic pulse or wave on which information can be imposed by varying the signal strength, varying the base frequency, varying the wave phase, or other means. This variation is called modulation. If the carrier frequency is derived from a cesium oscillator, the received signal can be used to calibrate other frequency sources. The table below lists the carrier frequencies of GPS and LORAN-C radio transmissions commonly used as frequency standards. In metrology, an unmodulated signal from an oscillator (such as a 10 MHz sine wave) is also sometimes referred to as a carrier frequency.

Radio Signal	**Carrier Frequency**
LORAN-C	100 kHz
Global Positioning System (GPS)	1575.42 MHz, 1227.6 MHz

Clock: A device that generates periodic accurately spaced signals used for timing applications. A clock consists of at least three parts: an oscillator, a device that counts the oscillations and converts them to units of time interval (such as seconds, minutes, hours, and days), and a means of displaying or recording the results.

Common-View: A measurement technique used to compare two clocks or oscillators at remote locations. The common-view method involves a single reference transmitter (R) and two receivers (A and B). The transmitter is in common-view of both receivers. Both receivers compare the simultaneously received signal to their local clock and record the data. Receiver A receives the signal over the path d_{ra} and compares the reference to its local clock (R - Clock A). Receiver B receives the signal over the path d_{rb} and records (R - Clock B). The two receivers then exchange and difference the data as shown in the following diagram.

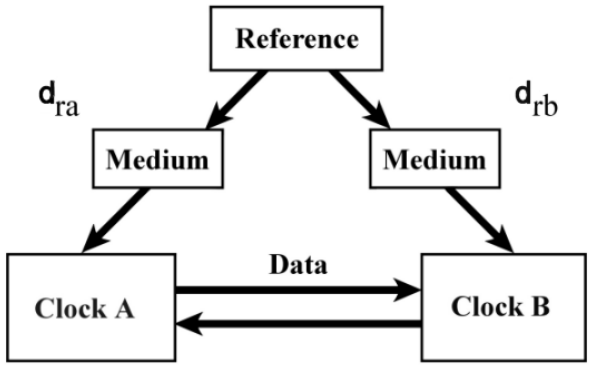

Common-view directly compares two clocks or oscillators to each other. Errors from the two paths d_{ra} and d_{rb}) that are common to the reference cancel out, and the uncertainty caused by path delay is nearly eliminated. The result of the measurement is (Clock A - Clock B) - (d_{ra} - d_{rb}).

Common-view measurements can be made using land-based transmitters, such as LORAN-C, as the reference. Today, a majority of common-view measurements use a GPS satellite as the reference transmitter, as illustrated below. This enables clocks to be compared over transcontinental distances, with uncertainties of just a few nanoseconds.

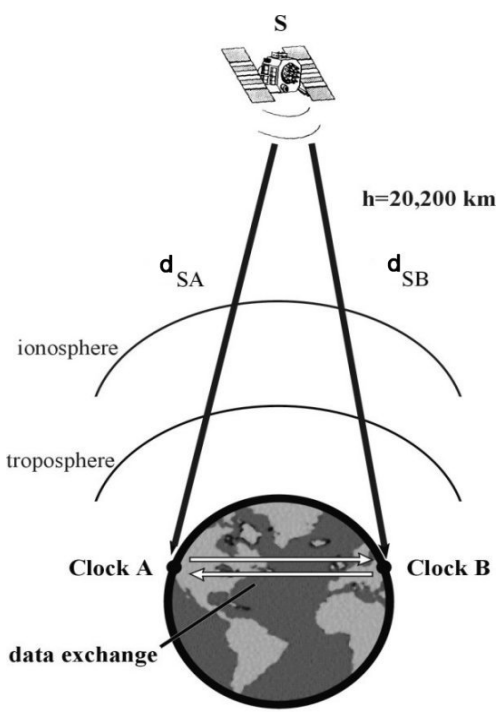

Coordinated Universal Time (UTC): The international atomic time scale that serves as the basis for timekeeping for most of the world. UTC is a 24-hour timekeeping system. The hours, minutes, and seconds expressed by UTC represent the time-of-day at the Earth's prime meridian (0° longitude) located near Greenwich, England.

UTC is calculated by the Bureau International des Poids et Measures (BIPM) in Sevres, France. The BIPM averages data collected from more than 200 atomic time and frequency standards located at about 50 laboratories. As a result of this averaging, the BIPM generates two time scales, International Atomic Time (TAI), and Coordinated Universal Time (UTC). These time scales realize the SI second as closely as possible.

UTC runs at the same frequency as TAI. However, it differs from TAI by an integral number of seconds. This difference increases when leap seconds occur. When necessary, leap seconds are added to UTC on either June 30 or December 31. The purpose of adding leap seconds is to keep atomic time (UTC) within ±0.9 s of an older time scale called UT1, which is based on the rotational rate of the Earth. Leap seconds have been added to UTC since 1972.

Keep in mind that the BIPM maintains TAI and UTC as "paper" time scales. The major metrology laboratories use the published data from the BIPM to steer their clocks and oscillators and generate real-time versions of UTC. You can think of UTC as the ultimate standard for time-of-day, time interval, and frequency. Clocks synchronized to UTC display the same hour, minute, and second all over the world (and remain within one second of UT1). Oscillators syntonized to UTC generate signals that serve as reference standards for time interval and frequency.

Daylight Saving Time: The part of the year when clocks are advanced by one hour, effectively moving an hour of daylight from the morning to the evening. Daylight Saving Time begins in the United States at 2 a.m. on the first Sunday of April. Time reverts to standard time at 2 a.m. on the last Sunday of October.

Drift (frequency): The linear (first order) component of a systematic change in frequency of an oscillator over time. Drift is caused by aging, by changes in the environment, and by other factors external to the oscillator.

DUT1: The current difference between UTC and to the astronomical time scale UT1. It is always a number ranging from -0.8 to +0.8 seconds, with a resolution of 0.1 seconds. This number can be added to UTC to obtain UT1.

Ensemble: A group of clock or oscillators whose outputs are averaged to create a time scale. Typically, the relative value of each clock is weighted, so that the best clocks contribute the most to the average.

Ephemeris Time (ET): An obsolete time scale based on the ephemeris second, which served as the SI second from 1956 to 1967. ET was used mainly by astronomers, and was replaced by Terrestrial Time (TT) in 1984.

Epoch: The beginning of an era (or event) or the reference date for a system of measurements.

Frequency: The rate of a repetitive event. If T is the period of a repetitive event, then the frequency f is its reciprocal, 1/T. Conversely, the period is the reciprocal of the frequency, T = 1/f. Since the period is a time interval expressed in seconds (s), it is easy to see the close relationship between time interval and frequency. The standard unit for frequency is the hertz (Hz), defined as the number of events or cycles per second. The frequency of electrical signals is often measured in multiples of hertz, including kilohertz (kHz), megahertz (MHz), or gigahertz (GHz).

Frequency Accuracy: The degree of conformity of a measured or calculated frequency to its definition. Since accuracy is related to the offset from an ideal value, frequency accuracy is usually stated in terms of the frequency offset.

Frequency Drift: An undesired progressive change in frequency with time. Frequency drift can be caused by component aging and environmental changes. Frequency drift may be in either direction (higher or lower frequency) and is not necessarily linear.

Frequency Offset: The difference between a measured frequency and an ideal frequency with zero uncertainty. This ideal frequency is called the nominal frequency.

Frequency offset can be measured in either the frequency domain or the time domain. A simple frequency domain measurement involves directly counting and displaying the output frequency of the device under test with a frequency counter. The frequency offset is calculated as:

$$f\,(offset) = \frac{f_{measured} - f_{nominal}}{f_{nominal}}$$

where

fmeasured is the reading from the frequency counter, and
fnominal is the specified output frequency of the device under test.

Frequency offset measurements in the time domain involve measuring the time difference between the device under test and the reference. The time interval measurements can be made with an oscilloscope or a time interval counter. If at least two time interval measurements are made, we can estimate frequency offset as follows:

$$f\,(offset) = \frac{-\Delta t}{T}$$

where

Δt is the difference between time interval measurements (phase difference), and T is the measurement period.

Frequency offset values are usually expressed as dimensionless numbers such as 1 x 10-10, since the quantities being measured are typically quite small. Using dimensionless values does not require knowledge of the nominal frequency. However, they can be converted to units of frequency (Hz) if the nominal frequency is known. To illustrate this, consider a device with a nominal frequency of 5 MHz and a frequency offset of +1.16 x 10-11. To find the frequency offset in hertz, multiply the nominal frequency by the offset:

(5 x 106) (+1.16 x 10-11) = 5.80 x 10-5 = +0.0000580 Hz

Then, add the frequency offset to the nominal frequency to get the actual frequency:

5,000,000 Hz + 0.0000580 Hz = 5,000,000.0000580 Hz

Frequency Shift: A sudden change in the frequency of a signal.

Frequency Stability: The degree to which an oscillating signal produces the same frequency for a specified interval of time. It is important to note the time interval; some devices have good short-term stability, others have good long-term stability. Stability doesn't tell us whether the frequency of a signal is right or wrong, it only indicates whether that frequency stays the same.

Frequency Standard: An oscillator (usually an atomic oscillator) that is used as a reference source for frequency measurements.

Gigahertz (GHz): One billion cycles per second (109 Hz).

Global Positioning System (GPS): A constellation of satellites controlled and operated by the United States Department of Defense (US DoD). The constellation includes at least 24 satellites that orbit the Earth at a height of 20,200 km in six fixed planes inclined 55° from the equator. The orbital period is 11 h 58 m, which means that a satellite will orbit the earth twice per day. By processing signals received from the satellites, a GPS receiver can determine its own position with an uncertainty of < 10 m.

The GPS satellites broadcast on two carrier frequencies: L1, at 1575.42 MHz, and L2, at 1227.6 MHz. Each satellite broadcasts a spread-spectrum waveform, called a pseudo-random noise (PRN) code on L1 and L2, and each satellite is identified by the PRN code it transmits. There are two types of PRN codes. The first type is a coarse acquisition (C/A) code with a chip rate of 1023 chips per millisecond. The second type is a precision (P) code with a chip rate of 10230 chips per millisecond. The C/A code is broadcast on L1, and the P code is broadcast on both L1 and L2. GPS reception is line-of-sight, which means that the antenna must have a clear view of the sky. The signals can be received nearly anywhere on Earth where a clear sky view is available.

The primary purpose of GPS is to serve as a radio navigation system, but it has also become perhaps the dominant system for the distribution of time and frequency. Each satellite carries either Rubidium or cesium oscillators, or a combination of both. The on-board oscillators provide the reference for both the carrier and code broadcasts. They are steered from US DoD ground stations and are referenced to Coordinated Universal Time (UTC) maintained by the United States Naval Observatory (USNO). By mutual agreement UTC(USNO) and UTC(NIST) are maintained within 100 ns of each other, and the frequency difference between the two time scales is < 1 x 10-13.

There are several types of time and frequency measurements that involve GPS, including one-way, common-view, and carrier-phase measurements.

Greenwich Mean Time (GMT): A 24-hour time keeping system whose hours, minutes, and seconds represent the time-of-day at the Earth's prime meridian (0° longitude) located near Greenwich, England. Technically speaking, GMT no longer exists, since it was replaced by other astronomical time scales many years ago and those astronomical time scales were subsequently replaced by the atomic time scale UTC. However, the general public still incorrectly uses the term GMT. When heard today, it should be considered as a synonym for UTC.

Groundwave: In radio transmission, a wave that propagates close to the surface of the Earth. Groundwave propagation is a characteristic of low frequency (LF) radio signals. Since the propagation or path delay of a groundwave signal remains relatively constant, LF signals tend to be a better time and frequency reference than high frequency (HF) signals, which are often dominated by skywave.

Hertz (Hz): The standard unit of frequency, equivalent to one event, or cycle per second. The abbreviation for hertz is Hz.

International Atomic Time (TAI): A time scale maintained internally by the BIPM, but seldom used by the general public. TAI realizes the SI second as closely as possible, and runs at the same frequency as Coordinated Universal Time (UTC). However, TAI differs from UTC by an integral number of seconds. This difference increases when leap seconds occur.

IRIG Time Codes: The time codes originally developed by the Inter-Range Instrumentation Group (IRIG), now used in government, military and commercial fields. There are many formats and several modulation schemes, but they are typically amplitude modulated on an audio sine wave carrier. The most common version is probably IRIG B, which sends year, day of year, hour, minute, and second data on a 1 kHz carrier frequency, with an update rate of once per second.

Jitter: The abrupt and unwanted variations of one or more signal characteristics, such as the interval between successive pulses, the amplitude of successive cycles, or the frequency or phase of successive cycles. Although widely used in fields such as telecommunications, the term jitter is seldom used in time and frequency metrology, since terms such as phase noise are more descriptive.

Julian Day or Julian Date (JD): An integer day number obtained by counting days from the starting point of noon on 1 January 4713 B.C. (Julian Day zero). One way of telling what day it is with the least possible ambiguity. The Modified Julian Date (MJD) has a starting point of midnight on November 17, 1858. You can obtain the MJD by subtracting exactly 2,400,000.5 days from the JD.

Kilohertz (kHz): One thousand cycles per second (103 Hz).

Leap Day: The extra day added to a year to make it have 366 days. Leap days are added on February 29th during leap years.

Leap Second: A second added to Coordinated Universal Time (UTC) to make it agree with astronomical time to within 0.9 second. UTC is an atomic time scale, based on the performance of atomic clocks. Astronomical time is based on the rotational rate of the Earth. Since atomic clocks are more stable than the rate at which the Earth rotates, leap seconds are needed to keep the two time scales in agreement.

> The first leap second was added on June 30, 1972, and so far, all leap seconds have been added on either June 30th or December 31st. Although it is possible to have a negative leap second (a second removed from UTC), so far, all leap seconds have been positive (a second added to UTC).

Leap Year: Leap years are years with 366 days, instead of the usual 365. Leap years are necessary because the actual length of a year is about 365.242 days, not 365 days, as commonly stated. Basically, leap years occur every 4 years, and years that are evenly divisible by 4 (2004, for example) have 366 days. This extra day is added to the calendar on February 29th.

> However, there is one exception to the leap year rule involving century years. Century years are considered as leap years only if they are evenly divisible by 400.

Long-Term Stability: The stability of a time or frequency signal over a long measurement interval, usually of at least 100 seconds. In most cases, long-term stability is used to refer to measurement intervals of more than one day.

LORAN-C: A ground based radio navigation system that operates in the low frequency (LF) radio spectrum at a carrier frequency of 100 kHz, with a bandwidth from 90 to 110 kHz. LORAN-C broadcasts are referenced to cesium oscillators and are widely used as a standard for frequency calibrations. It is also possible to synchronize a LORAN-C receiver so that it produces an on-time UTC pulse.

Megahertz (MHz): One million cycles per second (106 Hz).

Microsecond (μsec): One millionth of a second (10-6 s).

Millisecond (ms): One thousandth of a second (10-3 s).

Modified Allan Deviation (MDEV): A modified version of the Allan deviation statistic, which has the advantage of being able to distinguish between white and flicker phase noise. This makes it more suitable for estimating short-term stability than the normal Allan Deviation.

Modified Julian Date (MJD): An integer day number obtained by counting days from the starting point of midnight on November 17, 1858. You can obtain the MJD by subtracting exactly 2,400,000.5 days from the Julian Date (JD).

Nanosecond (ns): One billionth of a second (10-9 s).

National Institute of Standards and Technology (NIST): The Time and Frequency Division, part of the NIST Physics Laboratory, located in Boulder, Colorado, maintains the primary standard for frequency and time interval for the United States, provides official time to the United States, and carries out a broad program of research and service activities in time and frequency metrology. It maintains a UTC time scale that is (by mutual agreement) within 100 nanoseconds of UTC(USNO). Both NIST and the USNO can be considered official sources of time and frequency in the United States.

Network Time Protocol (NTP): A standard protocol used to send a time code over the Internet. The Network Time Protocol (NTP) was created at the University of Delaware, and is defined by the RFC-1305 document. The 64-bit time code contains the time in UTC seconds since January 1, 1900 with a resolution of 200 picoseconds.

Nominal Frequency: An ideal frequency with zero uncertainty. The nominal frequency is the frequency labeled on an oscillator's output. For this reason, it is sometimes called the nameplate frequency. For example, an oscillator whose nameplate or label reads 5 MHz has a nominal frequency of 5 MHz. The difference between the nominal frequency and the actual output frequency of the oscillator is the frequency offset.

Oven Controlled Crystal Oscillator (OCXO): A type of quartz oscillator design that reduces environmental problems by enclosing the crystal in a temperature-controlled chamber called an oven. When an OCXO is turned on, it goes through a "warm-up" period while the temperatures of the crystal resonator and its oven stabilize. During this time, the performance of the oscillator continuously changes until it reaches its normal operating temperature. The temperature within the oven then remains constant, even when the outside temperature varies. Since the environment is carefully controlled, OCXOs have excellent short-term stability.

One-Way Time and Frequency Transfer: A measurement technique used to transfer time and frequency information from one location to another. As shown in the following diagram, the reference source "A" simply sends a time signal to the user "B" through a transmission medium.

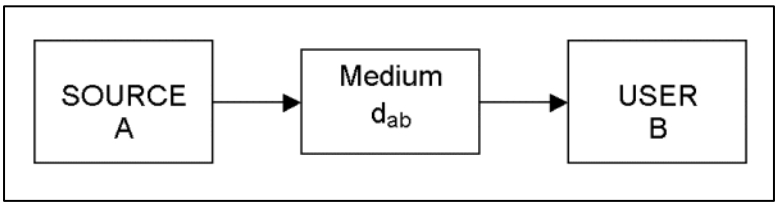

The delay "d" over a transmission path is at least 3.3 microseconds per kilometer. If high accuracy time transfer is desired in a one-way system the physical locations (coordinates) of the two clocks must be known so that the path delay can be calculated. For frequency transfer, only the variability of the delay (the path stability) is important.

Oscillator: An electronic device used to generate an oscillating signal. The oscillation is based on a periodic event that repeats at a constant rate. The device that controls this event is called a resonator. The resonator needs an energy source so it can sustain oscillation. Taken together, the energy source and resonator form an oscillator. Although many simple types of oscillators (both mechanical and electronic) exist, the two types of oscillators primary used for time and frequency measurements are quartz oscillators and atomic oscillators.

Phase Noise: The rapid, short-term, random fluctuations in the phase of a wave. To a large extent, phase noise can be removed by averaging. The unit used to describe phase noise is dBc/Hz (dB below the carrier per Hz of bandwidth). Reports of phase noise measurement results should include both the bandwidth and the carrier frequency.

Picosecond (ps): One trillionth of a second (10-12 s).

Precision: The term precision is somewhat ambiguous, and has several meanings in time and frequency metrology. Due to its ambiguity, it is not often used in a quantitative sense. Normally, it refers to the degree of mutual agreement among a series of individual measurements, values, or results. In this case, precision is analogous to standard deviation. Precision might also be used to refer to the ability of a device to produce, repeatedly and without adjustments, the same value or result, given the same input conditions and operating in the same environment. This use of precision makes it analogous to repeatability, reproducibility, or even stability.

Primary Standard: A standard that is designated or widely acknowledged as having the highest metrological qualities and whose value is accepted without reference to other standards of the same quantity.

In the time and frequency field, the term primary standard is sometimes used to refer to any cesium oscillator, since the SI definition of the second is based on the physical properties of the cesium atom. The term primary standard is also commonly used, at least in a local sense, to refer to the best standard available at a given laboratory or facility.

Quartz Oscillator: The most common source of time and frequency signals. More than two billion (2 x 109) quartz oscillators are manufactured annually. Most are small devices built for wristwatches, clocks, and electronic circuits. However, quartz oscillators are also found inside test and measurement equipment, such as counters, signal generators, and oscilloscopes; and interestingly enough, inside every atomic oscillator.

A quartz crystal inside the oscillator is the resonator. It could be made of either natural or synthetic quartz, but all modern devices use synthetic quartz.

Environmental changes of temperature, humidity, pressure, and vibration can change the resonance frequency of a quartz crystal, but there are several designs that reduce these environmental effects. These include the TCXO and OCXO. These designs (particularly the OCXO) often produce devices with excellent short-term stability. The limitations in short-term stability are due mainly to noise from electronic components in the oscillator circuits. Long-term stability is limited by aging. Due to aging and environmental factors such as temperature and vibration, it is hard to keep even the best quartz oscillators within 1 x 10-10 of their nominal frequency without constant adjustment. For this reason, atomic oscillators are used for applications that require better long-term stability and accuracy.

Resonance Frequency: The natural frequency of an oscillator. The resonance frequency is usually either divided or multiplied to produce the output frequency of the oscillator.

Second: The duration of 9,192,631,770 periods of the radiation corresponding to the transition between two hyperfine levels of the ground state of the cesium-133 atom. The definition was added to the International System (SI) of units in 1967.

Short-Term Stability: The stability of a time or frequency signal over a short measurement interval, usually of 100 seconds or less.

Skywave: A radio wave that bounces off the ionosphere and returns back to Earth. Skywave propagation is a characteristic of high frequency (HF) radio signals. Since the path delay of a skywave signal is constantly changing, skywaves are not as suitable for time and frequency measurements as groundwave or satellite signals.

Stability: An inherent characteristic of an oscillator that determines how well it can produce the same frequency over a given time interval. Stability doesn't indicate whether the frequency is right or wrong, but only whether it stays the same. The stability of an oscillator doesn't necessarily change when the frequency offset changes. You can adjust an oscillator and move its frequency either further away from or closer to its nominal frequency without changing its stability at all.

> The stability of an oscillator is usually specified by a statistic such as the Allan deviation that estimates the frequency fluctuations of the device over a given time interval. Some devices, such as an OCXO, have good short-term stability and poor long-term stability. Other devices, such as a GPS disciplined oscillator (GPSDO), typically have poor short-term stability and good long-term stability.

Standard: A device or signal used as the comparison reference for a measurement. A standard is used to measure or calibrate other devices. NIST is responsible for developing, maintaining and disseminating national standards for the United States for the basic measurement quantities (such as time interval), and for many derived measurement quantities (such as frequency).

Synchronization: The process of setting two or more clocks to the same time.

Syntonization: The process of setting two or more oscillators to the same frequency.

Tau: The averaging time, Tau (τ), used for the Allan Deviation.

Temperature-Compensated Crystal Oscillator (TCXO): A TCXO is a type of quartz oscillator that compensates for temperature changes to improve stability. In a TCXO, the signal from a temperature sensor is used to generate a correction voltage that is applied to a voltage-variable reactance, or varactor. The varactor then produces a frequency change equal and opposite to the frequency change produced by temperature. This technique does not work as well as the oven control used by an OCXO, but is less expensive. Therefore, TCXOs are used when high stability over a wide temperature range is not required.

Terrestrial Time (TT): An astronomical time scale which equals TAI + 32.184 s. The uncertainty of TT is +/- 10 microseconds. It replaced the now obsolete Ephemeris Time (ET) scale in 1984.

Time: The designation of an instant on a selected time scale, used in the sense of time of day; or the interval between two events or the duration of an event, used in the sense of time interval.

Time Base: An oscillator found inside an electronic instrument that serves as a reference for all of the time and frequency functions performed by that instrument. The time base oscillator in most instruments is a quartz oscillator, often an OCXO. However, some instruments now use Rubidium oscillators as their time base.

Time Code: A code (usually digital) that contains enough information to synchronize a clock to the correct time-of-day. Most time codes contain the UTC hour, minute, and second; the month, day, and year; and advance warning of daylight saving time and leap seconds.

Time Interval: The elapsed time between two events. In time and frequency metrology, time interval is usually measured in small fractions of a second, such as milliseconds, microseconds, or nanoseconds. Higher resolution time interval measurements are often made with a time interval counter.

Time Interval Counter: An instrument used to measure the time interval between two signals. A time interval counter (TIC) has inputs for two electrical signals. One signal starts the counter and the other signal stops it.

Time of Day: The information displayed by a clock or calendar, usually including the hour, minute, second, month, day, and year. Time codes derived from a reference source are often used to synchronize clocks to the correct time of day.

Time Offset: The difference between a measured on-time pulse or signal, and a reference on-time pulse or signal. Time offset measurements are usually made with a time interval counter. The measurement result is usually reported in fractions of a second, such as milliseconds, microseconds, or nanoseconds.

Time Scale: An agreed upon system for keeping time. All time scales use a frequency source to define the length of the second, which is the standard unit of time interval. Seconds are then counted to measure longer units of time interval, such as minutes, hours, and days. Modern time scales such as UTC define the second based on an atomic property of the cesium atom, and thus standard seconds are produced by cesium oscillators.

Time Standard: A device that produces an on-time pulse that is used as a reference for time interval measurements, or a device that produces a time code used as a time-of-day reference.

Time Transfer: A measurement technique used to send a reference time or frequency from a source to a remote location. Time transfer involves the transmission of a time code. The most common time transfer techniques are one-way, common-view, and two-way time transfer.

Two Way Time and Frequency Transfer: A measurement technique used to compare two clocks or oscillators at remote locations. The two-way method involves signals that travel both ways between the two clocks or oscillators that are being compared, as shown in the graphic below.

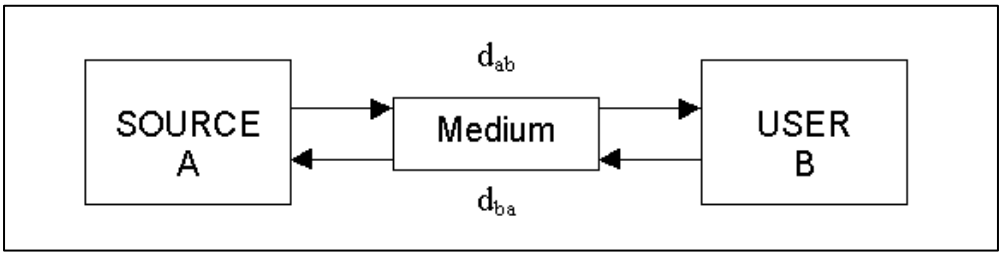

A half-duplex channel is a one-way system that is "turned around" to retransmit a signal in the opposite direction. In this method, the one-way delay between the transmitter and receiver is estimated as one-half of the measured round trip delay. The delay estimate can be sent to the user and applied as a correction, or the transmitter can advance the signal so that it arrives at the user's site on time.

A full-duplex system uses one-way signals transmitted simultaneously in both directions, often through a communications satellite. In this case data must be exchanged in both directions so that the two data sets can be differenced.

Uncertainty: Parameter, associated with the result of a measurement that characterizes the dispersion of values that could reasonably be attributed to the measurement. By convention, two standard deviations are normally used for uncertainty numbers.

United States Naval Observatory (USNO): Established in 1830, the USNO, located in Washington, D.C., is one of the oldest scientific agencies in the United States. The USNO determines and distributes the timing and astronomical data required for accurate navigation and fundamental astronomy. It maintains a UTC time scale that is (by mutual agreement) within 100 nanoseconds of UTC(NIST). Both NIST and the USNO can be considered official sources of time and frequency in the United States.

UT1: Astronomical time scale based on the rotational rate of the Earth.

Voltage Controlled Crystal Oscillators (VCXO): VCXOs typically employ a varactor diode to vary frequency of oscillation by application of a tuning voltage.

XO: An acronym for a quartz crystal oscillator. It usually refers to the simplest types of quartz oscillators that have no compensation for the effects of temperature.

Zulu: A term sometimes used in the military and in navigation as a synonym for Coordinated Universal Time (UTC). In military shorthand, the letter Z follows a time expressed in UTC. Zulu is not an official time scale. The term originated because the word Zulu is the radio transmission articulation for the letter Z, and the time zone located on the prime meridian is designated on many time zone maps by the letter Z.

**** NOTHING FOLLOWS ****