DOCUMENT 118-06

TELEMETRY GROUP

TEST METHODS FOR TELEMETRY SYSTEMS AND SUBSYSTEMS

VOLUME 1

TEST METHODS FOR VEHICLE TELEMETRY SYSTEMS

WHITE SANDS MISSILE RANGE
REAGAN TEST SITE
YUMA PROVING GROUND
DUGWAY PROVING GROUND
ABERDEEN TEST CENTER
NATIONAL TRAINING CENTER
ELECTRONIC PROVING GROUND

NAVAL AIR WARFARE CENTER WEAPONS DIVISION, PT. MUGU
NAVAL AIR WARFARE CENTER WEAPONS DIVISION, CHINA LAKE
NAVAL AIR WARFARE CENTER AIRCRAFT DIVISION, PATUXENT RIVER
NAVAL UNDERSEA WARFARE CENTER DIVISION, NEWPORT
PACIFIC MISSILE RANGE FACILITY
NAVAL UNDERSEA WARFARE CENTER DIVISION, KEYPORT

30TH SPACE WING
45TH SPACE WING
AIR FORCE FLIGHT TEST CENTER
AIR ARMAMENT CENTER
ARNOLD ENGINEERING DEVELOPMENT CENTER
BARRY M. GOLDWATER RANGE

NATIONAL NUCLEAR SECURITY ADMINISTRATION (NEVADA)

DISTRIBUTION A: APPROVED FOR PUBLIC RELEASE
DISTRIBUTION IS UNLIMITED

This page intentionally left blank.

DOCUMENT 118-06

TEST METHODS FOR TELEMETRY SYSTEMS AND SUBSYSTEMS

VOLUME 1

TEST METHODS FOR VEHICLE TELEMETRY SYSTEMS

JUNE 2006

Prepared by

TELEMETRY GROUP
RANGE COMMANDERS COUNCIL

Published by

Secretariat
Range Commanders Council
U.S. Army White Sands Missile Range
New Mexico 88002

This page intentionally left blank.

TABLE OF CONTENTS

LIST OF APPENDICES v

LIST OF FIGURES vii

LIST OF TABLES x

CHANGES TO THIS EDITION xi

PREFACE xiii

ACRONYMS AND INITIALISMS xv

CHAPTER 1: CALIBRATION/TEST METHODS FOR TRANSDUCER-BASED TELEMETRY SYSTEMS 1-1

1.1 General 1-1
1.2 Definitions 1-1
1.3 Transducer Types 1-3
1.4 Calibration Checks 1-3
1.5 Calibration Check - Measurand Methods 1-4
1.6 Dynamic Calibration Check 1-6
1.7 Calibration Check - Electrical-Substitution Calibration of Systems with Resistive Transducers 1-8
1.8 Calibration Check - Piezoelectric Transducers 1-16
1.9 Calibration Check - Substitute-Measurand Calibration of Systems with Servo Transducers Test 1-22
1.10 Calibration Check - Electrical-Substitution Calibration of Systems with Transducers Using Reactive Elements (Capacitors or Inductors) Test 1-23

CHAPTER 2: CHARGE AMPLIFIERS 2-1

2.1 General 2-1
2.2 Charge Amplifier General Characteristics 2-1
2.3 General Test Conditions 2-2
2.4 Test Equipment 2-2
2.5 Overload Recovery Test 2-3
2.6 Gain Test 2-4
2.7 Gain Stability with Source Capacitance Test 2-5
2.8 Gain Stability with Temperature Test 2-6
2.9 Frequency Response Test 2-7
2.10 Phase Response Test 2-8
2.11 Output Impedance Test 2-9
2.12 Residual Noise Test 2-11
2.13 Distortion Test 2-13

CHAPTER 3: DIFFERENTIAL DC AMPLIFIERS 3-1

3.1 General 3-1
3.2 Precautions 3-1
3.3 Test Equipment Required 3-2
3.4 Input Impedance, Differential Test 3-3

3.5 Common Mode Rejection and Common Mode Voltage Level Test 3-4
3.6 Linearity (dc) Test 3-6
3.7 Gain (dc) Test 3-8
3.8 Gain Stability (dc) with Temperature Test 3-10
3.9 Zero Stability with Temperature Test 3-11
3.10 Frequency Response Test 3-13
3.11 Slew Rate Test 3-14
3.12 Settling Time Test 3-16
3.13 Overload Recovery Test 3-17
3.14 Noise Test 3-18
3.15 Harmonic Distortion Test 3-20
3.16 Output Impedance Test 3-21

CHAPTER 4: POWER SUPPLIES 4-1
4.1 General 4-1
4.2 Line Regulation Test 4-1
4.3 Load Regulation Test 4-2
4.4 Efficiency Test 4-4
4.5 Load Transient Recovery Test 4-6
4.6 Stability (Drift) Test 4-8
4.7 Periodic and Random Deviation (PARD) Test 4-9
4.8 Temperature Coefficient Test 4-10

CHAPTER 5: TEST PROCEDURES FOR TELEMETRY TRANSMITTERS 5-1
5.1 General 5-1
5.2 Load Mismatch Test 5-3
5.3 RF Output Open and Short Circuit Protection Test 5-7
5.4 Incidental Amplitude Modulation (AM) Test 5-10
5.5 Modulation (ac) Linearity Test 5-14
5.6 Modulation (dc) Linearity Test 5-17
5.7 Modulation Input Impedance Test 5-21
5.8 Modulation Sensitivity Test 5-24
5.9 Modulation Frequency Response Test 5-31
5.10 Spurious Emissions Test 5-39
5.11 Primary Power Voltage and Low Voltage Recovery Test 5-42
5.12 Primary Power Reversal Test 5-45
5.13 Stability with Temperature and Power Variations Test 5-48
5.14 Ground Isolation Test 5-52
5.15 Primary Power Ripple Test 5-54
5.16 Incidental Frequency Modulation Test 5-56
5.17 Pulse Response Characteristics Test 5-61
5.18 Turn-On and Turn-Off Characteristics Test 5-64
5.19 Two-Tone Intermodulation Test 5-67
5.20 Reverse Conversion Test 5-70
5.21 Center Frequency and Frequency Stability Test (Digital Transmitters) 5-75
5.22 Frequency Deviation Test (Digital Transmitters) 5-79
5.23 Deviation Sense and Transition Threshold Test (Digital Transmitters) 5-83
5.24 Eye Pattern Response Test (Digital Transmitters) 5-87
5.25 Spectral Occupancy Test (Digital Transmitters) 5-91

5.26 Occupied Bandwidth and –25 dBm Bandwidth Test 5-94
5.27 Filtered OQPSK Transmitter Quality Test 5-99
5.28 Spectral Mask Test..... 5-102
5.29 Transmitter Phase Noise Test 5-104
5.30 Transmitter Bit Error Probability (BEP) versus Eb/N0 5-108
5.31 Software Receiver Analysis of Filtered OQPSK Transmitter Signals..... 5-111

CHAPTER 6: MIL-STD-1553 DATA ACQUISITION EQUIPMENT..... 6-1
6.1 General..... 6-1
6.2 Recorder Output Format Test 6-1
6.3 Composite Output Format Test..... 6-3
6.4 Error Test 6-5
6.5 Overflow Test 6-6
6.6 User Word Test..... 6-7
6.7 Inter-message Gap Time Test 6-8
6.8 Response Time Test..... 6-9
6.9 Frame Time Format Test 6-10
6.10 Binary Time Verification Test..... 6-11
6.11 Message Time Tag Test..... 6-12

CHAPTER 7: COMMON AIRBORNE INSTRUMENTATION SYSTEM (CAIS) BUS INTERFACE..... 7-1
7.1 General..... 7-1
7.2 Functional Check Test 7-1
7.3 References..... 7-3

LIST OF APPENDICES

APPENDIX A: AVAILABLE TRANSDUCER DOCUMENTATION A-1

APPENDIX B: PRESSURE TRANSDUCER THERMAL TRANSIENT TEST..... B-1

APPENDIX C: TRANSMITTER TEST PROCEDURES C-1

APPENDIX D: CALCULATION OF NONLINEARITY BY METHOD OF LEAST SQUARES D-1

APPENDIX E: INSTALLATION AND OPERATING GUIDE E-1

APPENDIX F: APPLICATION NOTE F-1

INDEX OF TESTS

This Page intentionally left blank.

LIST OF FIGURES

Figure 1-1. Voltage insertion calibration for potentiometric transducers. 1-8
Figure 1-2. Four-wire system. 1-9
Figure 1-3. Six-wire system. 1-10
Figure 1-4. Bipolar shunting. 1-11
Figure 1-5. Double-shunt calibration system. 1-11
Figure 1-6. Four-wire series calibration system. 1-12
Figure 1-7. Five-wire, series calibration system. 1-13
Figure 1-8. Typical low-level bridge system. 1-13
Figure 1-9. Shunt-resistor adapter. 1-14
Figure 1-10. Oscillographic frequency response display. 1-15
Figure 1-11. Shunt-resistor bridge. 1-15
Figure 1-12. Piezoelectric crystal transducer circuit. 1-16
Figure 1-13. Transducer charge generator equivalent circuit. 1-17
Figure 1-14. Voltage-generator equivalent circuit for a piezoelectric transducer. 1-17
Figure 1-15. Charge-generator equivalent circuit. 1-18
Figure 1-16. Response curve for high-pass filter. 1-19
Figure 1-17. Effect of low-frequency response. 1-20
Figure 1-18. Acceleration measuring system frequency response. 1-20
Figure 2-1. Block diagram for overload recovery test. 2-3
Figure 2-2. Block diagram for gain test. 2-5
Figure 2-3. Block diagram for gain stability test. 2-6
Figure 2-4. Block diagram for phase response test. 2-9
Figure 2-5. Block diagram for phase response test. 2-10
Figure 2-6. Block diagram for residual noise test. 2-12
Figure 2-7. Block diagram for distortion test. 2-13
Figure 3-1. Amplifier (dc) circuit. 3-1
Figure 3-2. Block diagram for check of measuring device CMR. 3-2
Figure 3-3. Block diagram for input impedance, differential test. 3-3
Figure 3-4. Block diagram for common mode rejection test. 3-5
Figure 3-5. Block diagram for linearity test. 3-7
Figure 3-6. Block diagram for gain test. 3-9
Figure 3-7. Block diagram for gain stability with temperature test. 3-10
Figure 3-8. Block diagram for zero stability with temperature test. 3-12
Figure 3-9. Block diagram for frequency response test. 3-13
Figure 3-10. Block diagram for slew rate test. 3-15
Figure 3-11. Block diagram for settling time test. 3-16
Figure 3-12. Block diagram for overload recovery test. 3-17
Figure 3-13. Block diagram for noise test. 3-19
Figure 3-14 Block diagram for harmonic distortion test. 3-20
Figure 3-15. Block diagram for output impedance test. 3-21
Figure 4-1. Line regulation test setup. 4-2
Figure 4-2. Load regulation test set-up. 4-3
Figure 4-3. Efficiency test setup: dc-to-dc supplies. 4-5
Figure 4-4. Efficiency test setup - ac-to-dc supplies. 4-6
Figure 4-5. Load transient recovery test setup. 4-7
Figure 4-6. Load transient recovery waveform. 4-8
Figure 4-7. Stability test set-up. 4-8

Figure 4-8. Periodic and random deviation test setup. 4-10
Figure 4-9. Temperature coefficient test setup. 4-11
Figure 5-1. Load mismatch test. 5-5
Figure 5-2. RF open and short test. 5-8
Figure 5-3. Incidental amplitude modulation test. 5-11
Figure 5-4. Incidental amplitude modulation calibration. 5-12
Figure 5-5. Modulation (ac) linearity test. 5-15
Figure 5-6. Modulation (dc) linearity test. 5-19
Figure 5-7. Modulation input impedance test. 5-21
Figure 5-8. Modulation sensitivity test. 5-26
Figure 5-9. Modulation sensitivity calibration test. 5-27
Figure 5-10. Modulation sensitivity test using Bessel null method. 5-28
Figure 5-11. Modulation frequency response test. 5-33
Figure 5-12. Modulation frequency response test using Bessel sideband ratios. 5-37
Figure 5-13. Antenna conducted spurious and harmonic output test. 5-39
Figure 5-13a. Test setup for measuring low-level spurious signals at the transmitter output. 5-40
Figure 5-14. Primary power voltage variation test. 5-43
Figure 5-15. Power reversal test. 5-46
Figure 5-16. Temperature stability tests. 5-49
Figure 5-17. Temperature test conditions. 5-50
Figure 5-18. Ground isolation test. 5-52
Figure 5-19. Incidental frequency modulation calibration test. 5-57
Figure 5-20. Incidental frequency modulation test. 5-59
Figure 5-21. Pulse response characteristics test. 5-62
Figure 5-22. Turn-on and turn-off characteristics test. 5-65
Figure 5-23. Two-tone intermodulation test. 5-68
Figure 5-24. Reverse conversion test. 5-72
Figure 5-25. Center frequency and frequency stability test setup. 5-76
Figure 5-26. Frequency deviation test setup. 5-80
Figure 5-27. Null spacing measurement test. 5-81
Figure 5-28. Deviation sense and transition threshold test setup 5-84
Figure 5-29. Threshold voltage measurement test. 5-85
Figure 5-30. Eye pattern response test setup. 5-88
Figure 5-31. Eye pattern ratio calculation test. 5-89
Figure 5-32. Premodulation filter test setup. 5-92
Figure 5-33. NRZ PCM/FM spectrum test. 5-94
Figure 5-34. Laboratory setup. 5-95
Figure 5-35. Open-air setup. 5-95
Figure 5-36. Spectrum analyzer calibration of 0 dBc level (modulated carrier). 5-96
Figure 5-37. Test setup for transmitter quality and spectral mask tests. 5-100
Figure 5-38. Test setup for transmitter phase noise test. 5-106
Figure 5-39. Test setup for transmitter bit error probability test. 5-109
Figure 5-40. Test setup for data digitization and software receiver data processing. 5-113
Figure 6-1. Hardware-based test setup for track spread data. 6-2
Figure 6-1a. PC-based test setup for track spread data. 6-2
Figure 6-2. Hardware-based test setup for chapter 8 data. 6-4
Figure 6-2a. PC-based test setup for chapter 8 data. 6-4
Figure 6-3. Hardware-based test setup for verifying IRIG time code accuracy. 6-11

Figure 6-3a. PC-based test setup for verifying IRIG time code accuracy. 6-12
Figure 7-1. Single CAIS Bus Configuration. 7-2
Figure 7-2. Split CAIS bus configuration. 7-2
Figure 7-3. Configuration check flow diagram (1/2). 7-4
Figure 7-4. Configuration Check Flow Diagram (2 / 2). 7-5
Figure B-1. Thermal transient test apparatus. B-2
Figure B-2. Base. B-3
Figure B-3. Transducer fixture support. B-4
Figure B-4. Transducer fixture (brass). B-5
Figure B-5. Glass retaining ring. B-6
Figure B-6. Transducer mounting plug. B-7
Figure B-7. Flashlamp slide block. B-8
Figure B-8. Lamp support (large). B-9
Figure B-9. Lamp support (small). B-10
Figure B-10. Test setup for transient thermal shock testing of sensors using a slotted, rotating disk, and a heat source equivalent to measurement application. B-15
Figure C-1. Transmitter RF envelope. C-1
Figure C-2. Crystal detector output. C-1
Figure C-3. Amplitude modulation. C-2
Figure D-1. Measured and calculated values. D-2
Figure E-1. GUI control window. E-6
Figure E-2. File browser window. E-6
Figure E-3. Dialog box: carrier tracking filter. E-7
Figure E-4. Dialog box: symbol tracking filter. E-8
Figure E-5. External/receiver/eye diagram. E-10
Figure E-6. External, discrete time scatter plot. E-10
Figure E-7. Loop synchronization progress. E-10
Figure E-8. Tabular analysis summary. E-11
Figure E-9. Graphics Analysis Control Window. E-11
Figure E-10. False lock eye diagram. E-13
Figure E-11. False lock constellation. E-13
Figure E-12. Data acquisition equipment. E-16
Figure F-1. Analyzer structure. F-3
Figure F-2. Reference power spectrum. F-4
Figure F-3. Constellation forms. F-5
Figure F-4. Detection Filters. F-6
Figure F-5. Transmitter Test Equipment. F-6
Figure F-6. Bit Interval Carrier Phase Trajectories of Reference Signal. F-13
Figure F-7. Transmitter performance summary. F-15
Figure F-8. Predicted detection performance with differential encoding. F-15
Figure F-9. Baseband spectra. F-16
Figure F-10. OQPSK Constellation measured at transmitter RF port. F-16
Figure F-11. Decision sample histogram. F-17
Figure F-12. OQPSK Constellation measured at transmitter RF port. F-17
Figure F-13. Bin interval phase trajectory. F-18
Figure F-14. Trajectory deviation spectrum. F-19

LIST OF TABLES

Table 1-1. Typical Shunt Resistor Values 1-10
Table 5-1. Test Equipment Required for Chapter 5 Tests 5-2
Table 5-2. Coefficients Of Equation For Using $J_0 - J_1$ (Db) Calculate Modulation Index (β) For $0.1 < \beta < 1.6$. 5-35
Table B-1. Thermal Energy-Distance Relationship B-12
Table F-1. Lower Bounds of Distance Loss/SDR (dB) F-9
Table F-2. Lower Bounds of TX Loss at Benchmarks F-11
Table F-3. Upper Bounds of Noise Margin (dB) F-12
Table F-4. Lower Bounds of RMS/maximum Trajectory Phase Deviation (degrees) F-14
Table F-5. Baseline RMS/peak-peak Jitter (degrees) F-14

CHANGES TO THIS EDITION

With the following changes, Document 118-03, Vol. 1 has been revised and reissued under number 118-06. Paragraph numbering has been changed throughout to conform to RCC formatting conventions. Changes noted below are highlighted in the text with the following icons:

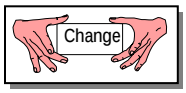

Chapter 5: **Test Procedures for Telemetry Transmitters**
Changed Paragraph 5.27 through Paragraph 5.30 (previously Paragraph 5.26 through Paragraph 5.29)
Added Paragraph 5.31 (Software Receiver Analysis of Filtered OQPSK Transmitter Signals).

Chapter 6: **MIL-STD-1553 Data Acquisition Equipment**
Has been replaced in its entirety.

Chapter 7: **Common Airborne Instrumentation System (CAIS) Bus Interface**
New Chapter.

Appendix A: **Available Transducer Documentation**
Has been changed to update/identify new web sites.

Appendix B: **Pressure Transducer Thermal Transient Test**
Paragraph renumbering only

Appendix C: **Transmitter Test Procedures**
Paragraph renumbering only

Appendix D: **Calculation of Nonlinearity by Method of Least Squares**
Paragraph renumbering only

Appendix E: **Installation and Operation Guide**
New Appendix (Note: Referenced from Paragraph 5.30)

Appendix F: **Application Note**
New Appendix (Note: Referenced from Paragraph 5.30)

Note: If you have any comments regarding this edition, please contact the Secretariat, Range Commanders Council.

Secretariat, Range Commanders Council
CSTE-DTC-WS-RCC
100 Headquarters Avenue
White Sands Missile Range, NM 88002

This page intentionally left blank.

PREFACE

The Telemetry Group of the Range Commanders Council has prepared this document to foster the compatibility of test methods for telemetry systems and subsystems at the member ranges. The range commanders highly recommend that telemetry equipment operated by the ranges and used in programs that require range support use the standards contained herein.

These standards do not necessarily define the existing capability of any test range, but constitute a guide for the orderly usage of test methods for telemetry systems and subsystems for both ranges and range users. The ultimate purpose is to ensure efficient interoperability between ranges, and compatibility of range user equipment with the ranges.

This standard is complemented by a companion series, RCC Document 106, *Telemetry Standards*, and RCC Document 119, *Telemetry Applications Handbook*. The policy of the Telemetry Group is to update the telemetry standards and test methods as required, being consistent with advances in the state of the art. To determine the current revision status, contact the RCC Secretariat.

Primary contributors to this report are shown below.

Mr. Raymond Faulstich
Member: Telemetry Group (TG)
Dyncorp Range and Engineering Services (Representing NAVAIR Patuxent River)
21841-B Three Notch Rd, Lexington Park, MD 20653
Phone: Com (301) 863-9282 (X129)
Fax: Com (301) 863-7759
E-Mail: rfaulstich@csc.com

Mr. Eugene Law
Member, Telemetry Group (TG)
NAVAIR Point Mugu, Code 543000e
575 I Ave Ste 1, Point Mugu, CA 93042-5049
Phone: DSN 351-0164/Com (805) 989-0164
Fax: DSN 351-0760/Com (805) 989-0760
E-Mail: Eugene.Law@Navy.Mil

Please direct any questions to:

Secretariat, Range Commanders Council
ATTN: CSTE-DTC-WS-RCC
100 Headquarters Avenue
White Sands Missile Range, New Mexico 88002-5110
Telephone: (505) 678-1107, DSN 258-1107
E-mail: rcc@wsmr.army.mil

This page intentionally left blank.

ACRONYMS AND INITIALISMS

ADC or A/DC	Analog-to-digital converter
AFC	Automatic frequency control
AGC	Automatic gain control
ALC	Automatic level control
AM	Amplitude modulation
BC	Bus controller
BCD	Binary coded decimal
BCM	Bit code modulation
BEP	Bit error probability
BER	Bit error rate
BPF	Band-pass filter
BW	Bandwidth
CAIS	Common Airborne Instrumentation System Bus Interface
ccw	Counterclockwise
CMR	Common made rejection
CRT	Cathode ray tube
CST	Conical scan technique
CW or cw	Clockwise
DA	Digital-to-analog
DAC	Digital-to-analog converter
DVM	Digital voltmeter
ENPBW	Equivalent noise power bandwidth
ENR	Excess noise ratio
FAU	Feed assembly unit
FM	Frequency modulation
FQPSK	Feher's quadrature phase shift keying
FS	Full-scale
FSI	Full-scale input
FSO	Full-scale output
GPS	Global Positioning System
GUI	Graphical User Interface
G/T	Gain/temperature
IF	Intermediate frequency
IFM	Incidental frequency modulation
IM	Intermodulation
I/O	Input/output
IP	Intercept point
IRIG	Interrange Instrumentation Group
ISA	Instrument Society of America

LCP	Left circular polarization
LIDAR	Lidar detection ranging
LO	Local oscillator
MGC	Manual gain control
MI	Modulation index
MS/s	Megasample per second
NF	Noise figure
NIST	National Institute For Science And Technology
NPR	Noise to power ratio
NPRF	Noise power ratio floor
NPRI	Noise power ratio intermodulation
OQPSK	Offset quadrature phase shift keying
PAM	Pulse amplitude modulation
PARD	Periodic and random deviation
PCM	Pulse code modulation
PM	Phase modulation
PN	Pseudo noise
RC	Resistance capacitance
RCP	Right circular polarization
RF	Radio frequency
RTI	Referred to input
RL	Return loss
rms	Root-mean-square
RNRZ-L	Randomized non-return-to-zero-level
RT	Remote terminal
RTO	Referred to output
SCM	Single channel monopulse
SNR	Signal-to-noise ratio
SOQPSK-A	Shifted offset quadrature phase shift keying – version A
SSG	Scan signal generator
SWR	Standing wave ratio
TC	Time constant or temperature coefficient
TED	Tracking error demodulator
TG	Tachometer gradient
THD	Total harmonic distortion
TM	Telemetry
TTL	Transmit time lidar also transistor/transistor logic
UUT	Unit under test
V dc	Volts direct current
VBW	Video bandwidth
VFO	Variable frequency oscillator
VSWR	Voltage standing wave ratio

CHAPTER 1

CALIBRATION/TEST METHODS FOR TRANSDUCER-BASED TELEMETRY SYSTEMS

1.1 General

A telemetry system measurement begins with the sensing of a measurand by a transducer located either on a test vehicle or at a remote test site. It ends at a data storage/display device located at a receiving test site. Systems interconnected by radio links, direct wiring or electro-optical means, or any combination, are included.

To ensure that data is of the highest possible quality, individual components should be tested and calibrated in a suitable laboratory before installing the system. Subsequently, the telemetry system should be subjected to a carefully conducted end-to-end calibration check just before, during, and immediately after the actual test. This document is intended to address general methodologies and techniques, and no attempt has been made to cover all possible cases.

1.2 Definitions

1.2.1 Telemetry System. A composite of the four following basic elements: transducer, transmitting system, receiving system, and data storage/display system.

1.2.1.1 Transducer. A device that senses a specific physical quantity, property, or condition (referred to as the measurand), and converts it into a form that facilitates the transmission, storage, processing, and display of the measurement data. Measurands may include temperature, pressure, flow, velocity, acceleration, linear and angular position, and displacement. The transducers considered here produce electrical output signals that are functions of the measurand.

1.2.1.2 Transmitting System. An interconnected combination of some or all of the following: signal conditioners, subcarrier oscillators, multiplexers, analog-to-digital converters (ADC or A/D), transmitters, and antennae (or direct wire transmission lines or electro-optical links).

1.2.1.3 Receiving System. An interconnected combination of some or all of the following: antennae, preamplifiers, receivers, tape recorders, discriminators, decommutators, bit and frame synchronizers, digital-to-analog converters (DAC or D/A), and output filters.

1.2.1.4 Data Storage/Display System. An interconnected combination of components such as oscilloscopes, analog and digital meters, graphic recorders, tape recorders, CRT displays, computers, and digital printers. These components may be connected directly to the receiver system output or may employ a data processing computer before the display. Data may be presented in either electrical units (volts or amperes) or in the engineering units associated with the measurand.

1.2.2 Full Scale. The algebraic difference between input or output values corresponding to the upper and lower limits of the transducer's specified range.

1.2.3 Range. The algebraic difference between the upper and lower limits of measurand values over which the transducer is intended to measure.

1.2.4 Output Signal. Either the telemetry system output or the transducer output, as appropriate. For additional transducer nomenclature and terminology, refer to (Instrument Society of America) ISA-S37.1 - *Electrical Transducer Nomenclature and Terminology.*

1.2.5 Linearity. A property defining a constant ratio of incremental cause and effect; that is, the output is directly proportional to the input. Five different line definitions are discussed in subparagraphs 1.2.9 through 1.2.13.

1.2.6 Hysteresis. The maximum difference in output, at any measurand value within the specified range, when the value is reached with an increasing measurand, passed, and then reached with a decreasing measurand.

1.2.7 Repeatability. The ability to reproduce the same output when a given value of measurand is applied consecutively under the same conditions and is approached from the same direction.

1.2.8 Overrange. The maximum measurand value which can be applied without causing a change in the system's performance beyond specified tolerances.

1.2.9 End-Point Line. The line between the outputs at 0 and 100 percent full-scale (the end points).

1.2.10 Best-Straight Line. The line midway between the two parallel straight lines that lie closest together and enclose all output values obtained during one calibration cycle.

1.2.11 Theoretical Line. A line between specified measurand and output points, not necessarily (0 percent FSI, 0 percent FSO) and (100 percent FSI, 100 percent FSO), where FSI is full-scale input and FSO is full-scale output.

1.2.12 Terminal Line. A line between (0 percent FSI, 0 percent FSO) and (100 percent FSI, 100 percent FSO).

1.2.13 Least-Squares Curve. The curve for which the sum of the squares of the residuals is minimized. Residuals refer to the deviations of output readings from their corresponding points on the calculated (usually by a computer or equivalent) straight line. It is based on the principle that the most probable value of an observed quantity is such that the sum of the squares of the deviations of the observations from this value is a minimum. It is based on the fact that most measurements of physical quantities show a normal distribution. The line is thus defined in terms of the quantities measured and is statistically significant. Standard deviations can be assigned to the slope, intercept, and other parameters derived from it.

1.3 Transducer Types

Procedures for performance testing and calibration of many types of transducers are documented in standards and similar publications are referenced in Appendix A. Such procedures are not available for all types and ranges of transducers.

1.4 Calibration Checks

The three methods of obtaining inputs for telemetry system calibration checks, in order of preference, are intended-measurand method, substitute-measurand method, and electrical-substitution method.

This chapter further details the substitute-measurand and electrical-substitution methods for six classes of transducers, categorized by their electrical properties. Classes not addressed here, would follow similar procedures tailored to the transducer. The six classes of transducers are resistive/piezoresistive, piezoelectric, servo, reactive element (capacitive or inductive), thermoelectric, and integral electronics.

1.4.1 Intended-Measurand Method. With all elements of the telemetry system aligned, calibrated, and in place, accurately known values of the intended measurand are applied to the transducer and the resulting signals are observed at the data storage/display system. While this method provides the best possible verification of the telemetry system's calibration, it may not always be possible to implement this method because of economics, scheduling, equipment, or other practical limitations. In such instances, one of the two methods described in subparagraphs 1.4.2 and 1.4.3 can be employed with the understanding that the data quality may be degraded.

1.4.2 Substitute-Measurand Method. When it is not feasible to apply the intended measure to the transducer, it is often possible to use an accurately known substitute measurand. Although the transducer is not exposed to the intended measurand, it is exercised, and the signal applied to the remainder of the telemetry system originates from the transducer's electrical circuitry. The following are several examples:

- Orienting an accelerometer with respect to the Earth's gravitational field so it experiences + 1g,

- Applying a known sub-atmospheric pressure to one side of a differential pressure transducer with the other side vented to the atmosphere when the actual measurands may be high-pressure liquids, and

- Immersing a thermocouple in a controlled temperature liquid bath when the intended measurand may be a high-temperature gas.

1.4.3 Electrical-Substitution Method. For those situations where it is not possible to apply a measurand to the transducer, an electrical signal source is substituted for the transducer's output. The transducer is disconnected and signals with known characteristics, approximating those expected from the transducer, are applied to the input of the transmitting system.

1.5 Calibration Check - Measurand Methods

The following paragraphs offer a general description of the methods used for a calibration check of a linear telemetry system (that is, system-output to measurand-input relationship has the general form $y = mx + b$). The methodology presented may be applicable to nonlinear systems, but caution must be exercised in data analysis. To minimize the effects of external influences, this check should be performed only after the entire system and the calibration equipment have achieved stability. It is applicable to any of the previously mentioned transducer types.

1.5.1 Intended-Measurand Method. The measurand source should be capable of supplying values of the intended measurand commensurate with the specified range or at least equivalent to the values anticipated during the actual test. When possible, the environmental conditions to which the transducer will be exposed during the actual test should be duplicated. As an alternative, the transducer's sensitivity to its environment should have been determined in the calibration laboratory. Measurement of the applied measurand should be made with test equipment having combined errors or uncertainties significantly smaller (that is, 10 percent or less) than those of the telemetry system being used. Calibration equipment should be verified on a regular basis using suitable standards. During the calibration check, environmental conditions should be maintained constantly and be documented to permit subsequent data corrections.

1.5.2 Substitute-Measurand Method. This source should also supply values of measurand commensurate with the specified range of the transducer or at least equivalent to the values anticipated during the actual test. Care must be taken to ensure that physical differences between the intended and substitute measurand do not invalidate the calibration check.

1.5.3 Static Calibration Check. The following subparagraphs apply to both the intended and substitute measurand methods for checking telemetry system calibration as well as for laboratory calibration of transducers. To eliminate the transient effects associated with varying the measurand, the calibration and telemetry systems should be allowed to stabilize before recording the measurand and output values. A static calibration follows the sequence and verifies the parameters indicated below.

1.5.3.1 Zero-Measurand Output. This output can represent an important data point when the actual test will begin with zero-applied measurand. Also, if a zero-measurand input is intended to produce zero-scale output, observation of this signal also permits identification of such system problems as zero-shift, instability, and noise.

In a limited number of situations, an easily conducted check can be accomplished by defining the ambient environment as the zero-measurand reference, assuming the ambient conditions are stable and known with sufficient accuracy. For example, a transducer designed to measure absolute pressure, having adequate sensitivity and vented to the atmosphere, will provide an output signal in response to ambient pressure. In another instance, test vehicle orientation can provide a known component of the Earth's gravitational field as a useful input to certain accelerometers.

1.5.3.2 Full-Scale Output. The transducer is subjected to measurand values equal to the lower and upper limits of its specified range (or full-scale (FS)). The algebraic difference between the values of the corresponding output signals defines the full-scale output (FSO). In general, the telemetry system should be capable of accommodating the expected FSO of the transducer without going into saturation.

1.5.4 Calibration Curves. Two examples of similar procedures, which may be used to obtain the data for an output-versus-measurand calibration curve, are discussed. The choice of procedure is determined by such factors as the accuracy required, time and funds available, transducer number, and the calibration difficulty. While the 21-point calibration procedure (or cycle) is preferred, the 11-point procedure will usually satisfy the majority of quality assurance requirements. For a linear system, it is most convenient to express the calibration curve in terms of a specific straight line. The slope of the line and change in output to change in measurand (for example, volts per degree) is also referred to as the sensitivity or transfer function of the system.

1.5.4.1 21-Point Calibration Cycle. Measurand values are increased from the zero-measurand point to 100 percent full scale in 10 percent full-scale increments such as 0, 10, 20, ..., 100, ..., 10, 0. Generally, two complete calibration cycles are conducted.

1.5.4.2 11-Point Calibration Cycle. Measurand values are increased from the zero-measurand point to 100 percent full scale in 20 percent full-scale increments such as 0, 20, ..., 100, 80, ..., 0.

1.5.5 Over-range. For various reasons, a transducer may be exposed during the actual test to a measurand input that exceeds its specified operating range. Performance of the telemetry system during and following such an over-range may be affected. Before conducting this check, the over-range (also called overload) capability of the transducer must be determined from its stated specifications or laboratory calibration data. Over-range values are typically between 110 and 150 percent FS and are not expected to change the transducer's performance beyond a specified tolerance. If this check is conducted after the calibration cycle has been completed, telemetry system performance should be rechecked at several calibration points, that is, 0 and 100 percent FS.

NOTE

This procedure is not routinely carried out during a system calibration check.

1.6 Dynamic Calibration Check

The majority of all telemetry measurements are dynamic in nature. The dynamic response of the telemetry system must meet specific requirements if the resultant data from the system are to be useful. System considerations that influence response include the incorporation of evaluated components, number and kind of interfaces, and the determination of noise sources. The dynamic response of any system is described by a complex transfer function that relates system output to system input. Experimentally, the function is determined from the system output resulting from the application of a known input. This process constitutes the dynamic calibration of the system. The calibrations must verify the following as a minimum to generate or characterize a dynamic system response

- flat amplitude versus frequency response
- linear phase versus frequency response
- linear input/output relationship

To ascertain the most valid system characterization, the system should be calibrated in the expected environments.

1.6.1 Dynamic Calibration Sequence. The dynamic calibration sequence consists of dynamic sensitivity determination, dynamic amplitude linearity determination, amplitude frequency response verification, phase frequency response verification, and transient response determination.

1.6.2 Dynamic Sensitivity Determination. The basic approach to establishing the dynamic sensitivity of the telemetry system consists of applying a sinusoidally varying measurand to the transducer. The amplitude of the measurand should be equal to the range of the transducer. The directional capabilities of the transducer will affect the sensitivity determination. For example, the amplitude of the sinusoidal measurand is peak limited by the range of a bi-directional sensor. The peak-to-peak amplitude should cover the sensor's span. For a unidirectional transducer, the peak amplitude of the varying measurand during calibration should be equal to one half of the range. The sinusoidal measurand then oscillates about the half-range point with a peak-to-peak value equal to the span of the transducer. If the peak amplitude of the sinusoidal measurand is accurately known or can be accurately related to the static system calibration, the system dynamic sensitivity can be determined. The system sensitivity determined by this means is valid only at the one measured frequency.

1.6.3 Dynamic Amplitude Linearity Determination. The linearity of a system transfer function can vary with the amplitude of the signal. Accordingly, dynamic sensitivity determination at several measurand amplitude levels is performed; 25, 50, 75, and 100 percent of full scale is usually sufficient. In systems with zero frequency, that is, dc response, the amplitude linearity at zero frequency is determined. If a system does not have a zero frequency response, the end-to-end calibration is by necessity the dynamic calibration. Consequently, the linearity determinations are conducted with greater detail at, for example, 10 percent measurand amplitude intervals. All linearity determinations should be made at several frequencies.

1.6.4 Amplitude versus Frequency Response Verification. The dynamic performance characteristics of the entire telemetry system are established by exploring the entire range of frequencies over which the system is expected to perform (including zero frequency). At each frequency, the amplitude of the sinusoidally varying measurand is set to cover the entire range of the transducer as far as practicable. These dynamic sensitivity determinations are performed at any number of frequencies within the bandwidth of the system. The test frequencies are usually chosen to divide the bandwidth into equal increments. The minimum number of test frequencies is three. One frequency should be near the upper limit of the band at a point where the response has not been affected by the high frequency roll off. The second frequency should be sufficiently higher than the first to establish the roll-off rate of the system transfer function. The third frequency should be located approximately at the midpoint between zero frequency and the first upper band frequency. The purpose of these tests is to show that the frequency response is flat to the upper band edge, thereby, ascertaining the linear dynamic behavior. As usual, more adequate assurance is gained by the use of more test frequencies or the application of well-defined, broad-band noise. These additional tests can include sinusoids with amplitudes of half of those used for the three frequencies and amplitudes corresponding to a moderate system over-range. The over-range amplitudes should never exceed 110 percent of the transducer range. These additional tests can detect system distortions because of greater than anticipated measurand amplitudes. Please note that the phase versus frequency response system characteristics must also be reasonable before the system can be labeled as linear (refer to subparagraph 1.6.5).

1.6.5 Phase versus Frequency Response Verification. The determination of the complete dynamic response consists of measurement of the amplitude frequency response and the phase frequency response. Both can often be determined simultaneously by means of a time correlation between a reference transducer monitoring the measurand applied to the transducer input and the telemetry system data output. The output recording device must have two channels with identical recording characteristics. The signal representing the measurand is fed into one channel, and the system output is fed into the other. The observed variation in time between corresponding points on the displayed signals can be used to determine the phase difference. When this procedure is done at a number of frequencies, the phase versus frequency characteristic can be obtained. With the complete dynamic response defined, physical quantities such as vibration, pressure, position, and attitude can be determined accurately with the application of the system amplitude/frequency/ phase characteristics. While it is feasible to measure the phase characteristics of the telemetry system exclusive of the transducer, this practice is not recommended because omission of the sensor may lead to serious errors in the dynamic response determination. This phenomenon is due to the transducer phase shift or time delay. An example might be a pressure transducer with a connecting tube leading to an orifice to which the measurand (pressure) is applied.

1.6.6 Transient Response Determination. Circumstances can arise in which the application of sinusoidal or well-defined, broad-band noise measurands is not practical. An example is pressure over certain amplitudes and frequency ranges. In these instances, the dynamic response may be determined by the application of selected transient inputs with precise mathematical descriptions. Step and ramp functions, and pulses are deterministic signals that can provide the dynamic system response from the system output signal characteristics. Frequently, this analysis is done with fast Fourier transform analyzers or properly programmed digital computers. An alternative approach involves visual studies of the system response to one of the three dynamic stimuli mentioned. For

example, when a step function is applied, system characteristics such as rise time, overshoot, damping, and natural frequency can be calculated. A measure of dynamic linearity can be obtained by using stimuli of different amplitudes within the system range.

1.7 Calibration Check - Electrical-Substitution Calibration of Systems with Resistive Transducers

The following subparagraphs describe two calibration methods: voltage insertion and electrical substitution.

1.7.1 Voltage-Insertion Calibration for Potentiometric Transducers Test.

1.7.1.1 Purpose. This test calibrates telemetry systems that use potentiometric transducers employing the electrical-substitution method.

1.7.1.2 Test Equipment.

- precision voltage source
- precision resistors or decade box

1.7.1.3 Procedure. Voltage insertion calibrations for potentiometric transducers consist of switching in a known voltage in place of the transducer output. A two or three-step calibration is usually employed. The steps may be generated by any precision voltage source. One method is shown in Figure 1-1. The method shown in the figure uses precision resistors and ensures that the calibration source impedance matches the transducer impedance (R_c approximately equals R_t). Figure 1-1 is a diagram of a three-step calibration using a resistance network. The three steps are center, 80 percent of the lower band, and 80 percent of the upper band. Preferred for recording devices, which are band-edge limited, are 80- or 90 percent steps.

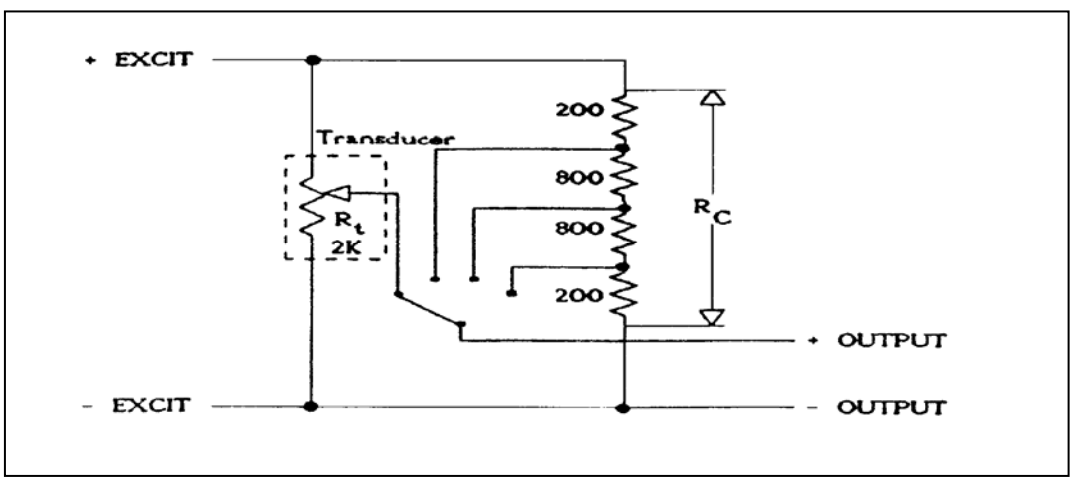

Figure 1-1. Voltage insertion calibration for potentiometric transducers.

1.7.2 Electrical-Substitution Calibration for Resistance Bridges Test.

1.7.2.1 Purpose. This test calibrates telemetry systems that use resistance-bridge transducers employing the electrical-substitution method.

1.7.2.2 Test Equipment.

- precision voltage source
- precision resistors or decade box
- signal generator

1.7.2.3 Procedure. Three techniques that exist for electrical substitution calibration of resistance bridge systems are shunt calibration, series calibration, and bridge substitution.

1.7.2.3.1 Shunt Calibration Techniques. Inserting a resistor of known value in parallel with one arm of a strain gage bridge is a single-shunt calibration. The calibration resistor is inserted across the arm opposite the conditioning system. The conditioning system may contain a balance network, a limiting resistor, modulus resistors, and temperature compensators located in the excitation leads to the bridge. Standard practice is to insert the shunt resistor between the negative input (excitation) and negative output (see Figure 1-2). This practice reduces errors caused by shunting the bridge-conditioning resistors.

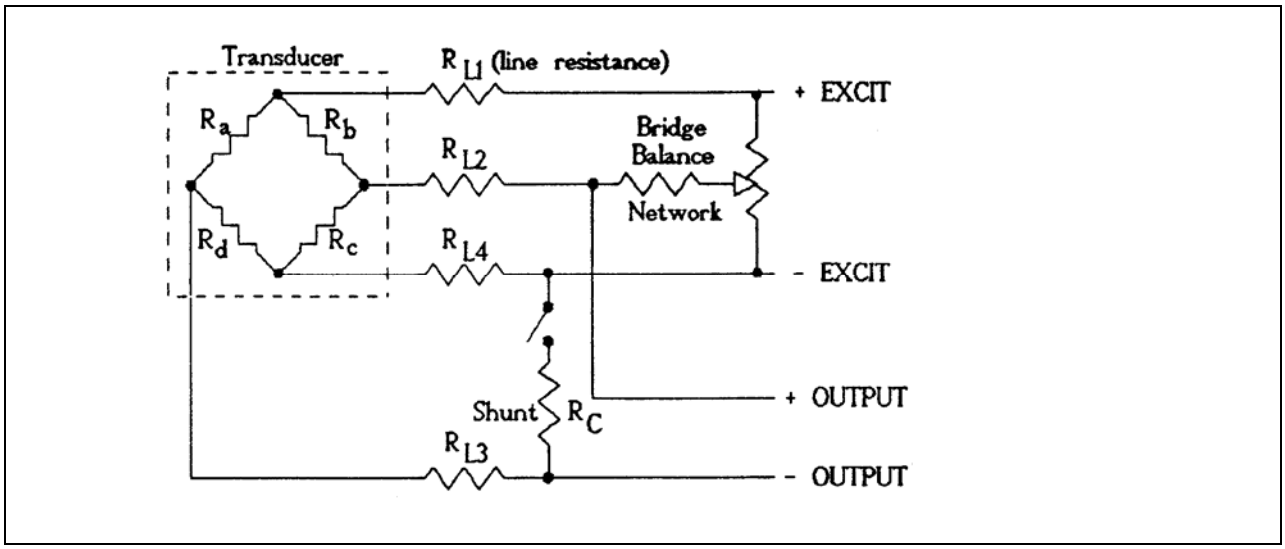

Figure 1-2. Four-wire system.

1.7.2.3.1.1 Shunt Resistor Value. A simplified formula often used to arrive at a shunt resistor value is

$$R_c = \frac{R}{4KS} - \frac{R}{2} \quad \text{(single active arm)} \qquad (1\text{-}1)$$

where:

R_c = shunt resistor value in ohms

R = value of bridge in ohms

K = proportion of full-scale output desired (such as 0.10, 0.25, and 0.50)

S = full-scale sensitivity of the strain gage transducer in volts output per volt of excitation (such as 0.002 and 0.005)

TABLE 1-1. TYPICAL SHUNT RESISTOR VALUES

120 ohm bridge, 2mV/volt			350 ohm bridge, 3mV/volt		
10%	-	150 k ohms	10%	-	291 k ohms
25%	-	60 k ohms	25%	-	116 k ohms
50%	-	30 k ohms	50%	-	58 k ohms
75%	-	20 k ohms	75%	-	39 k ohms
100%	-	15 k ohms	100%	-	29 k ohms

1.7.2.3.1.2 Six-Wire System. The use of a bridge transducer in the field usually requires some length of transmission cable between the transducer and the bridge-conditioning system. The resistance of this transmission line can cause appreciable calibration errors. If the shunt resistor is located at the bridge conditioning system and a four-wire system is used, there will be a calibration error. The error can be reduced by the use of a six-wire system (see Figure 1-3).

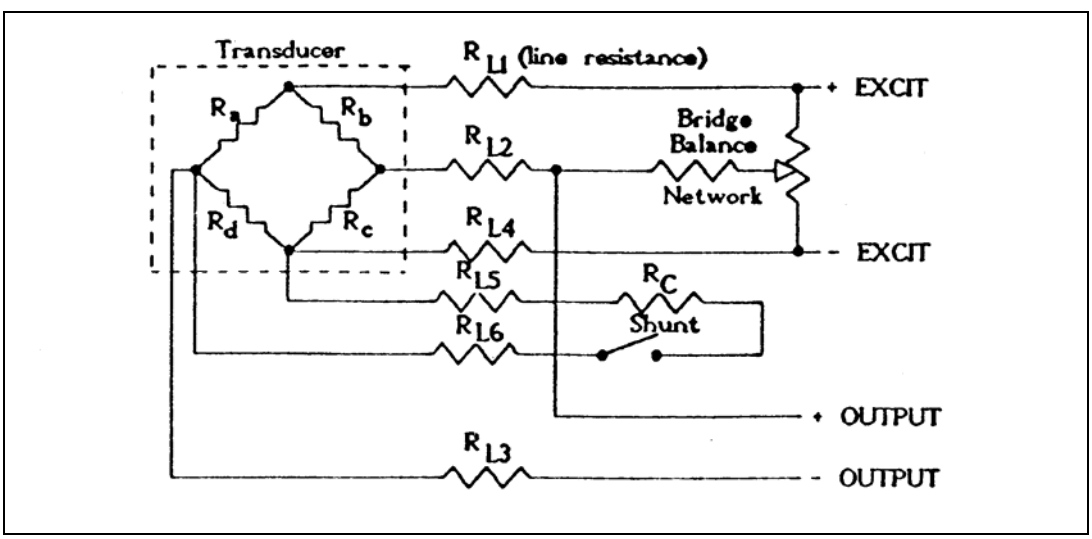

Figure 1-3. Six-wire system.

1.7.2.3.1.3 Bipolar Shunting. Bipolar shunting is used when the physical loading creates positive and negative going signals, and it is desirable to create positive and negative calibration outputs. The calibration resistor is alternately inserted across the two arms opposite the bridge-conditioning network (see Figure 1-4).

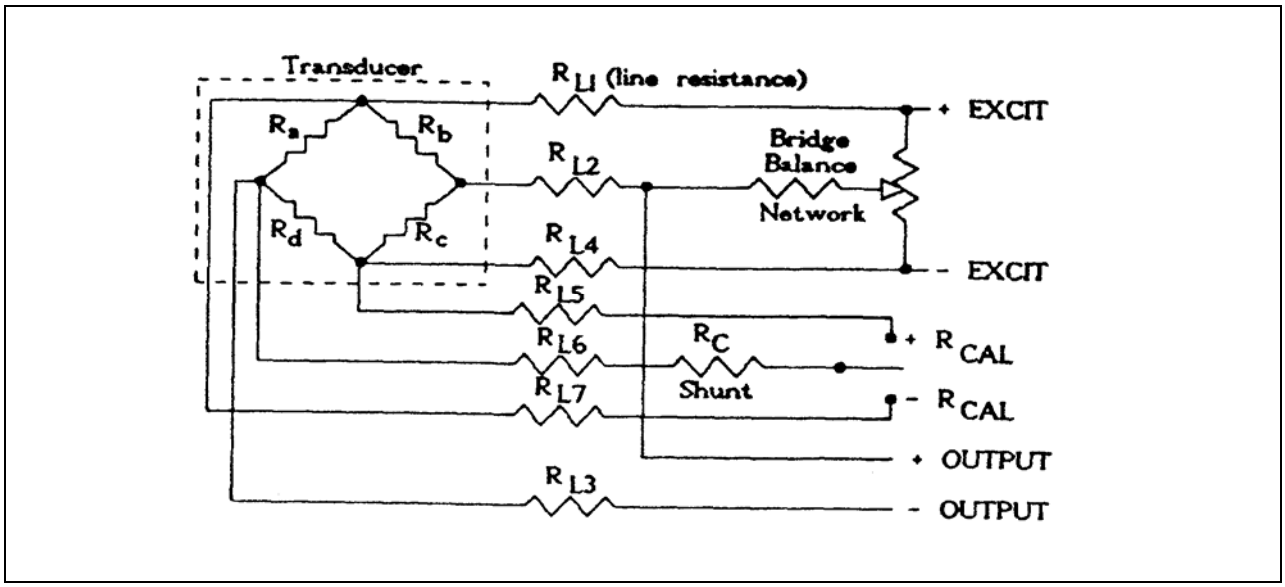

Figure 1-4. Bipolar shunting.

1.7.2.3.1.4 Double-Shunt Calibration. Double-shunt calibration is essentially the same as single shunt except that two diagonally opposite arms are shunted simultaneously. Double-shunt calibration is rarely used, because it is complex and adds wiring to the circuit (see Figure 1-5).

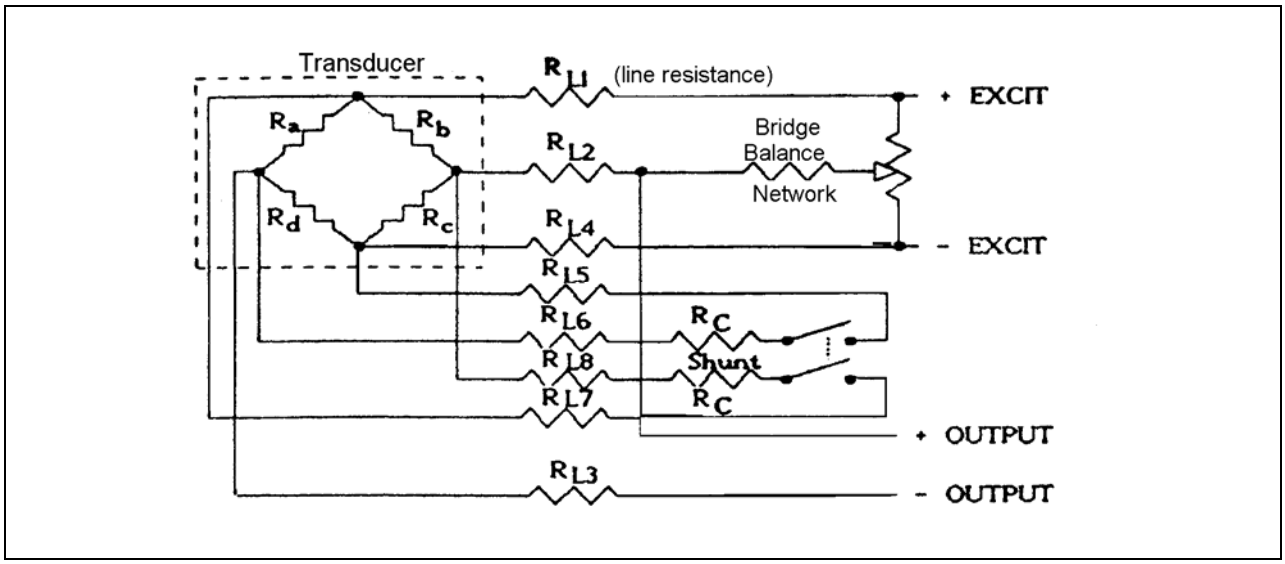

Figure 1-5. Double-shunt calibration system.

1.7.2.3.2 Series Calibration Techniques. Series calibration of bridge transducers consists of two distinct phases. In the zero-calibration phase, excitation is removed from the bridge. The

sensitivity resistor (R_{SENS}) is placed across the bridge input terminals to present the same resistance encountered in the data circuit. In the series-calibration phase, one side of the excitation is removed from the bridge, and a calibration resistor (R_{C1}) is placed in series with the sensitivity resistor and one side of the bridge output. A second calibration resistor (R_{C2}) of value R (bridge arm resistance) is connected between the R_{SENS} and R_{C1} connection and the excitation return. This resistor maintains the approximate equivalent bridge impedance across the excitation, thus making the calibration voltage approximately the same as the bridge excitation. Measurand equivalents for these two calibration steps can easily be determined during laboratory or end-to-end calibration of the transducer. During flight, these steps can be used to compensate for zero drift and sensitivity changes because of variations in signal conditioning, bridge excitation, and the like.

Series calibration overcomes a serious shortcoming of shunt calibration. During in-flight application of the shunt resistor, the transducer is subject to mechanical input. The calibration step is superimposed upon this signal. If the mechanical input is static and of sufficient magnitude, over-ranging will invalidate the calibration step. If the mechanical input is a dynamic signal, it may be impossible to accurately determine the magnitude of the calibration step. The magnitude of the series calibration step is essentially independent of the mechanical input.

One drawback to series calibration when using the four-wire system is the effect of transmission line resistance as shown in Figure 1-6. When laboratory calibration of bridge transducers is selected, significant errors are often encountered because of differences in laboratory and field transmission line resistances. The error can be reduced by using a five-wire series system as shown in Figure 1-7. The remaining error is approximately $2R_L/R$, where R_L is the transmission line resistance and R is the bridge resistance. The error can be completely eliminated by measurand end-to-end substitution calibration techniques that consider transmission line resistance.

Another source of error arises when the sensitivity resistor is changed and a new series calibration equivalent is not determined through recalibration. A change in sensitivity resistance alters the effective value of the series calibration resistance. However, for the typical case, the error incurred is negligible.

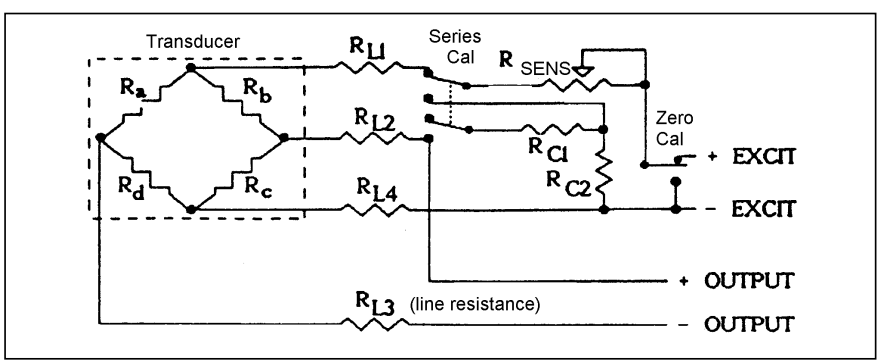

Figure 1-6. Four-wire series calibration system.

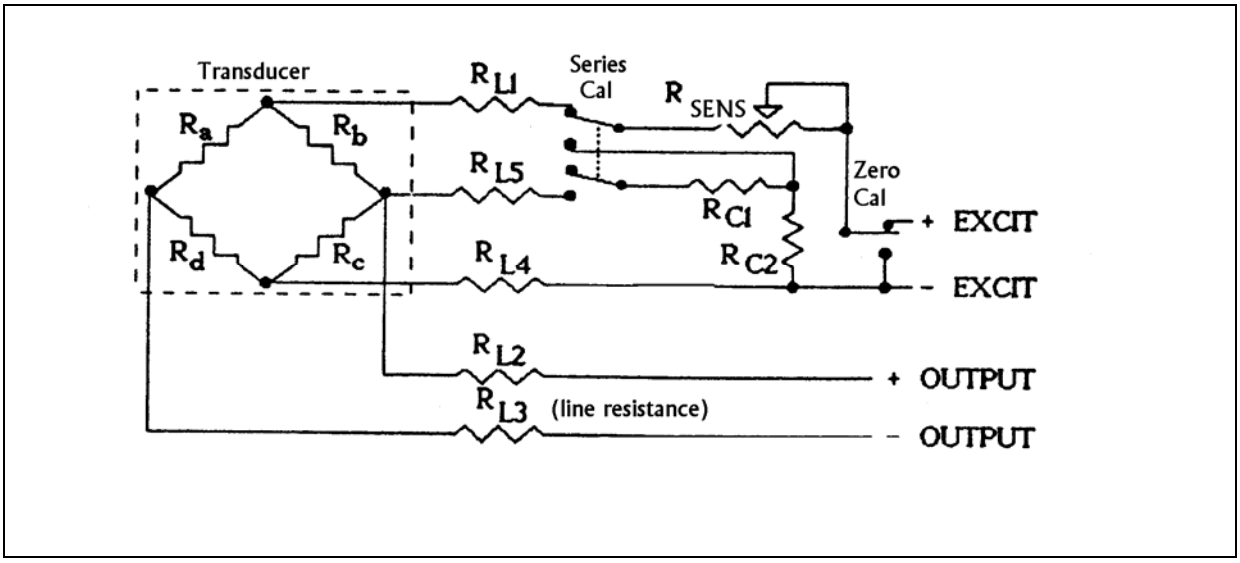

Figure 1-7. Five-wire, series calibration system.

1.7.2.3.3 Bridge Substitution Techniques. The transducer substitution technique is a method used to perform end-to-end system calibrations by substituting a model for the transducer. Figure 1-8 represents a typical low-level bridge system.

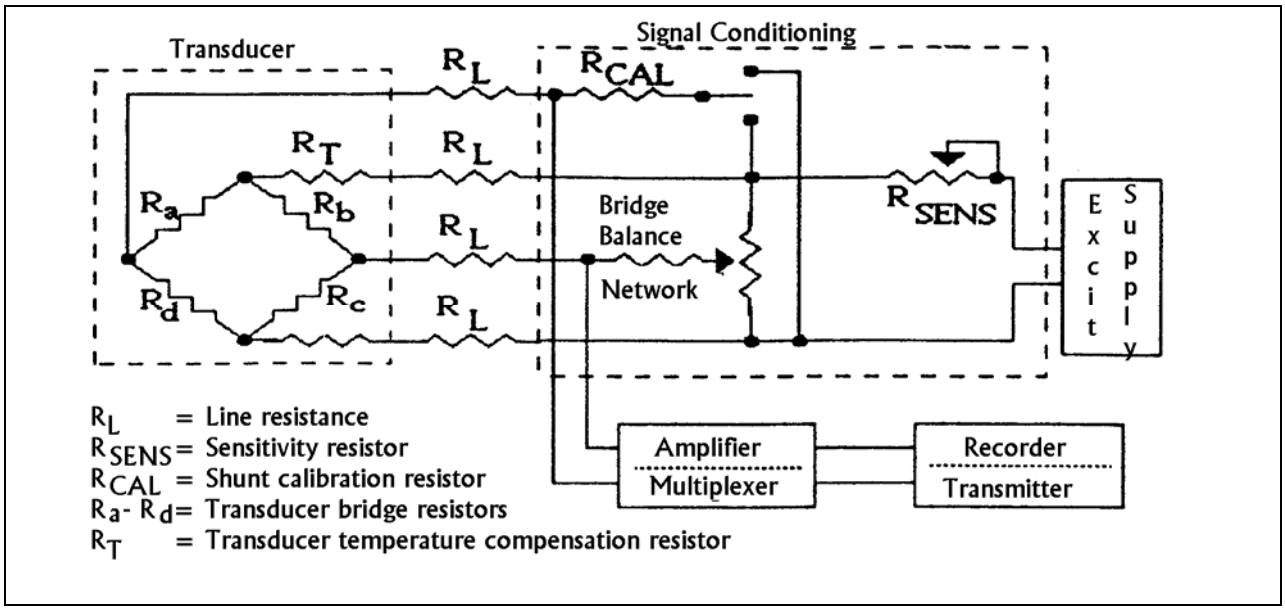

Figure 1-8. Typical low-level bridge system.

1.7.2.3.3.1 Bridge Transducer Models. A good bridge transducer model has the same terminal characteristics as the transducer and provides a fast and simple method of generating a static and dynamic electrical output equivalent to that generated by the transducer for a given mechanical input. It also provides a convenient method for verifying the calibration resistor's measurand equivalence for shunt and series systems. Two types of bridge transducer models employed for system calibrations are the shunt-resistor adapter and the shunt-resistor bridge.

1.7.2.3.3.1.1 Shunt-Resistor Adapter. The shunt-resistor adapter (see Figure 1-9) is simple and inexpensive to construct and is an exact model, because it is used in conjunction with the actual transducer. The adapter is inserted between the transducer and the system to perform three primary functions.

(1) It supplies the stimulus for performance of system end-to-end calibrations. Shunting the arms of a transducer bridge with the appropriate resistors produces an unbalance in the bridge equivalent to that produced by a given measurand. The adapter provides a convenient method of applying these shunt resistors directly to the bridge with negligible line loss.

(2) It performs a system frequency response test. A convenient system frequency response can be performed by selecting the appropriate shunt resistor and sweeping the adapter's ac power supply over the desired frequency range. Figure 1-10 shows a typical oscillographic display of the results.

(3) It provides a convenient check of the system's calibration resistors (R_C) and equivalents. The system's R_C equivalent will differ from the values established by the laboratory calibration as a function of line resistance, calibration resistor tolerance, and the like. Since the adapter-shunt resistors are precision resistors applied directly to the bridge, the equivalence of the adapter-shunt resistors will not be affected by lead resistance and other variables.

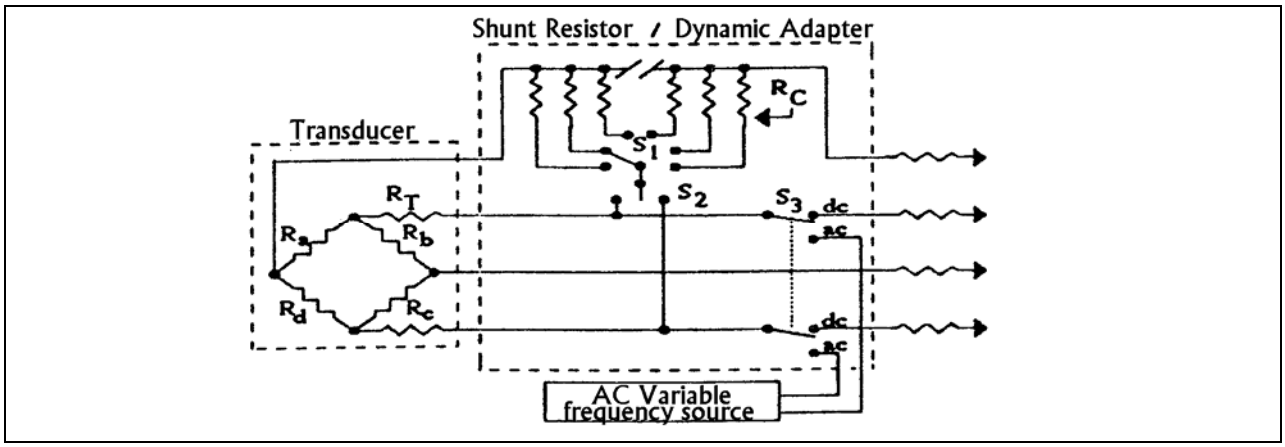

Figure 1-9. Shunt-resistor adapter.

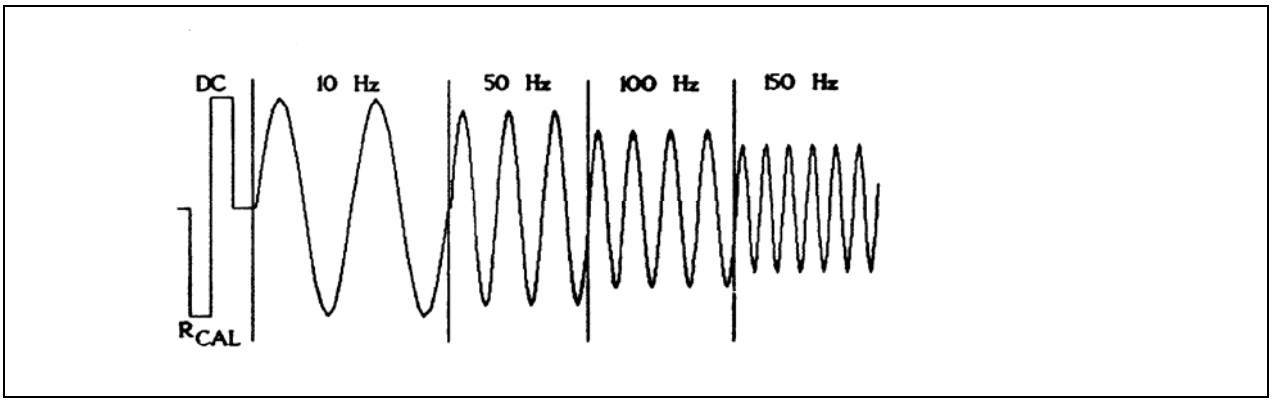

Figure 1-10. Oscillographic frequency response display.

Although the shunt-resistor adapter model is a very powerful and a simple calibration tool, it has two undesirable characteristics. The least desirable is that the system calibration and calibration resistor equivalents generated by the adapter are incremental values superimposed on the transducer output resulting from the mechanical input acting at the time of the test. Also, the adapter does not provide a fixed independent reference, because it is used in conjunction with the transducer.

1.7.2.3.3.1.2 Shunt-Resistor Bridge. The undesirable features of the shunt-resistor adapter can be remedied by replacing the actual transducer shown in Figure 1-9 with a bridge model as shown in Figure 1-11. Since the shunt-resistor bridge (bridge model plus shunt-resistor adapter) is a stable, complete model of the transducer, it can be used to perform an absolute end-to-end system calibration, which can be a valuable aid in trouble-shooting instrumentation systems and controlling the quality of laboratory calibrations.

Several disadvantages are encountered when using the shunt-resistor bridge as a calibration tool. Because some transducers are hard to model, it is difficult to ensure that the bridge is a representative model of the transducer under all conditions. Furthermore, a different bridge model is required for each major transducer design.

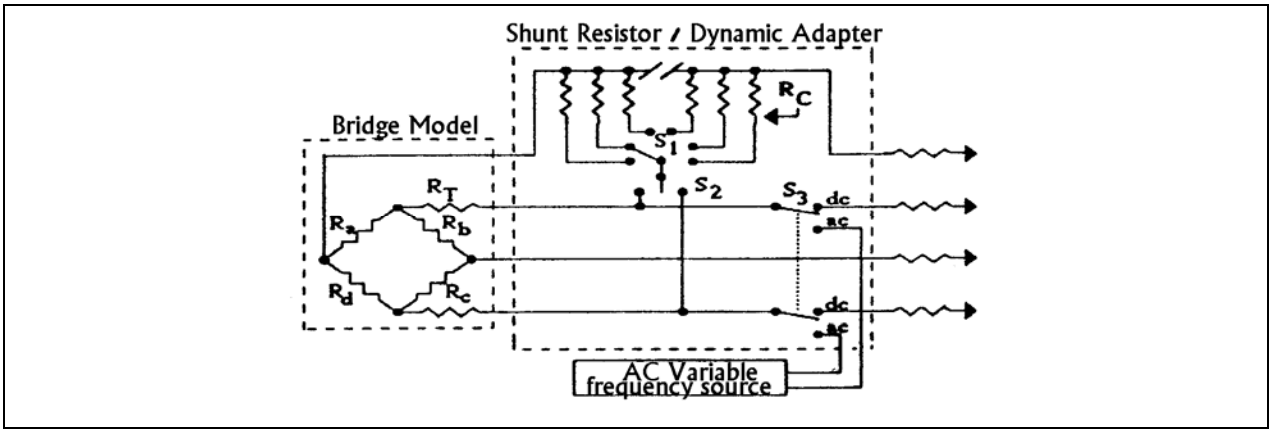

Figure 1-11. Shunt-resistor bridge.

1.8 Calibration Check - Piezoelectric Transducers

1.8.1 Substitute-Measurand Calibration of Systems with Piezoelectric Transducers Test.

1.8.1.1 Purpose. This test calibrates, by the substitute-measurand method, telemetry systems using dual-element piezoelectric transducers.

1.8.1.2 Test Equipment.

- dynamic calibration device (shaker)
- precision voltage source

1.8.1.3 Procedure. A dual-element piezoelectric transducer possesses both a sensing-crystal element and a driving-crystal element. First, dynamically calibrate the transducer to establish its basic sensitivity. Remove the original dynamic stimulus and apply a voltage across the driving-crystal element, generating a dynamic force that provides an alternate stimulus to the sensing-crystal element. Establish a sensitivity for the driving-crystal element, in voltage/mechanical-input at various amplitude levels and frequencies, by monitoring the voltage applied to it simultaneously with the sensing crystal indicated output. Application of voltage to the driving crystal at time of actual test verifies the functional integrity of the measuring transducer and calibrates the entire telemetry system.

1.8.2 Electrical-Substitution Calibration of Systems with Piezoelectric Transducers Test

1.8.2.1 Purpose. Electrical-substitution tests calibrate the remainder of the telemetry system by simulating expected outputs from piezoelectric transducers.

1.8.2.1.1 Piezoelectric Transducer Equivalent Circuit. The actual circuit for a piezoelectric crystal transducer appears as a charge generator in parallel with a combination of inductance, capacitance, and resistance (see Figure 1-12).

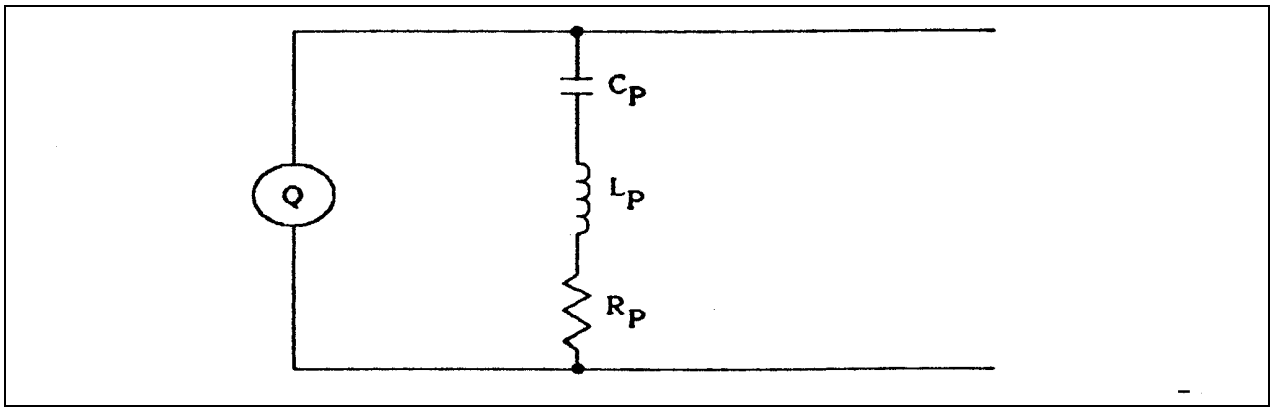

Figure 1-12. Piezoelectric crystal transducer circuit.

Because the operating frequencies of the transducer are usually low, the inductive contribution to the reactance ($2\pi fL_p$) can be ignored. Similarly, since the resistance of the crystal is typically high compared to the input resistance of the amplifier into which it is operating, the resistance (R_p) can also be neglected. All that remains is the crystal capacitance (C_p). A transducer charge generator equivalent circuit is shown in Figure 1-13.

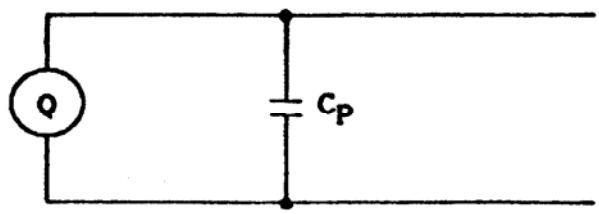

Figure 1-13. Transducer charge generator equivalent circuit.

An alternative electrical circuit representing a voltage generator equivalent circuit for a piezoelectric transducer is shown in figure 1-14. In Figure 1-14, the voltage (E_p) is equal to Q/C_p. All of the previous discussions have ignored the effect of added capacitive loads to the transducer. This added capacitance can be associated with the cable (C_c), the amplifier input (C_a), or with discrete capacitance (C_d). A final modification for the charge-generator equivalent circuit to account for this additional capacitance is shown in Figure 1-15. The voltage output (E_o) from a circuit such as this one is equal to $Q/(C_p+C_c+C_a+C_d)$.

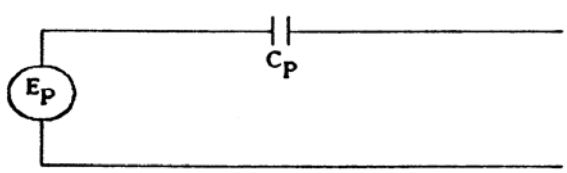

Figure 1-14. Voltage-generator equivalent circuit for a piezoelectric transducer.

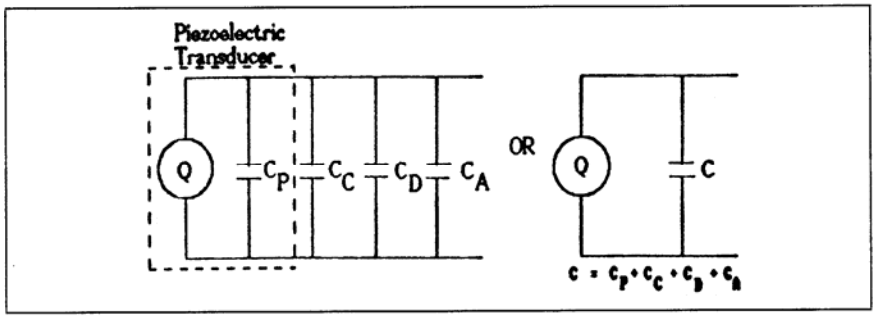

Figure 1-15. Charge-generator equivalent circuit.

1.8.2.1.2 Amplifier Types.

1.8.2.1.2.1 Voltage Amplifier. Piezoelectric transducers can be interfaced to devices such as emitter followers and source followers. These circuits are used because of their high input resistance (R_a), which is typically on the order of 10^9 ohms. Such high resistance is required to produce a resistance capacitance (RC) time constant adequate for the desired system low frequency response. The actual value of this time constant for voltage-sensing amplifiers is $R_a(C_p+C_c+C_a+C_d)$.

NOTE

The input capacitance must be kept the same in calibration setup as it is in the installation.

1.8.2.1.2.2 Charge Amplifier. Piezoelectric transducers can also be interfaced with devices denoted as charge amplifiers. These charge amplifiers are typically two-stage devices in which the first stage converts a charge to a voltage, and the second stage provides voltage gain.

The first stage is a very high gain operational amplifier employing capacitive feedback (C_f). This circuit typically results in a high, effective amplifier input capacitance compared to that of the piezoelectric transducer cable combination. If this property is maintained, all of the charge generated by the transducer is received at the amplifier, and the signal level is independent of source capacitance.

In actual practice, a feedback resistor (R_f) is placed across the capacitor to prevent it from charging. The system low frequency response is then determined by the time constant (R_fC_f) that is independent of circuit capacitance.

1.8.2.1.3 Frequency Response Considerations.

1.8.2.1.3.1 Low Frequency. The equivalent circuits presented for piezoelectric transducers illustrate that when operating into an amplifier, the low-frequency response of the circuit is properly described by the response curve for a high-pass RC filter (see Figure 1-16). The RC

product of interest for a voltage amplifier, as indicated on the curve, is the product of the amplifier input resistance times the total circuit capacitance. As described previously, the RC product of interest for a charge amplifier equals the feedback resistance times the feedback capacitance.

To illustrate the application of the curve to a hypothetical vibration measuring system, assume the lowest frequency of interest is 3 Hz and the permitted attenuation is 5 percent. The required response ratio is then 0.95, which corresponds to an fRC product of 0.5, resulting in an RC time constant greater than 167 milliseconds.

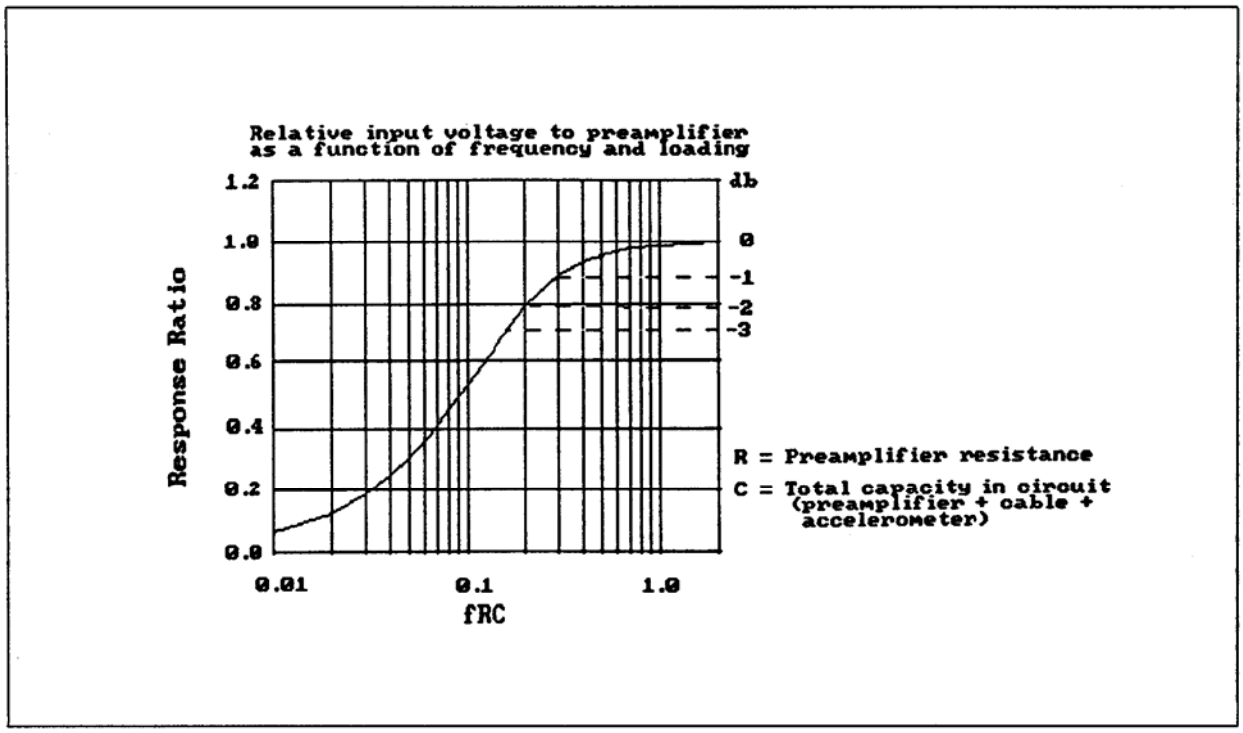

Figure 1-16. Response curve for high-pass filter.

Inadequate low-frequency response of the measuring system attenuates the pulse peak and produces undershoot of the pulse trailing edge. Figure 1-17 illustrates this response for a rectangular pulse.

Less than 5 percent attenuation of the trailing edge of a rectangular pulse requires an RC time constant equal to 20 times the pulse width. Because most pulses have peaks occurring before the pulse trailing edge, an RC time constant equal to or greater than 20 times the pulse width will typically result in less than 2 percent attenuation of the pulse peak.

1.8.2.1.3.2 High Frequency. The high-frequency response of piezoelectric transducer amplifier systems can only be determined by multiplying the transfer function of the transducer by the transfer function of the amplifier. Figure 1-18 illustrates an acceleration measuring system. The system high-frequency requirement must be derived from either the highest vibration frequency of interest or the frequency spectrum of the desired pulse.

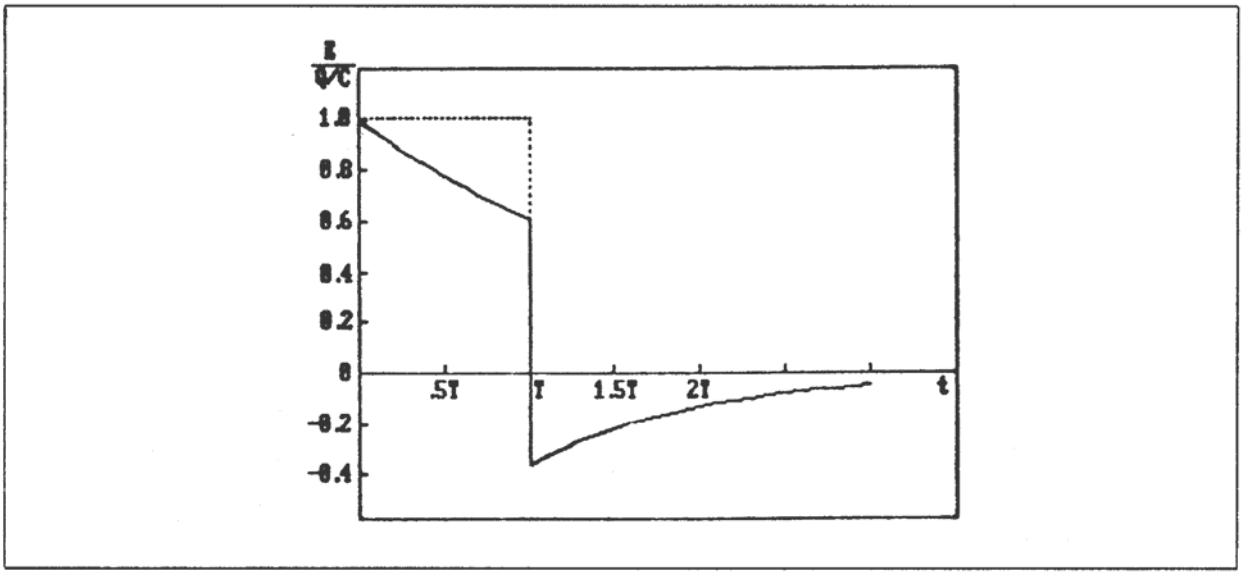

Figure 1-17. Effect of low-frequency response.

1.8.2.2 Test Equipment.

- precision ac signal generator
- precision resistors or decade box
- precision capacitors

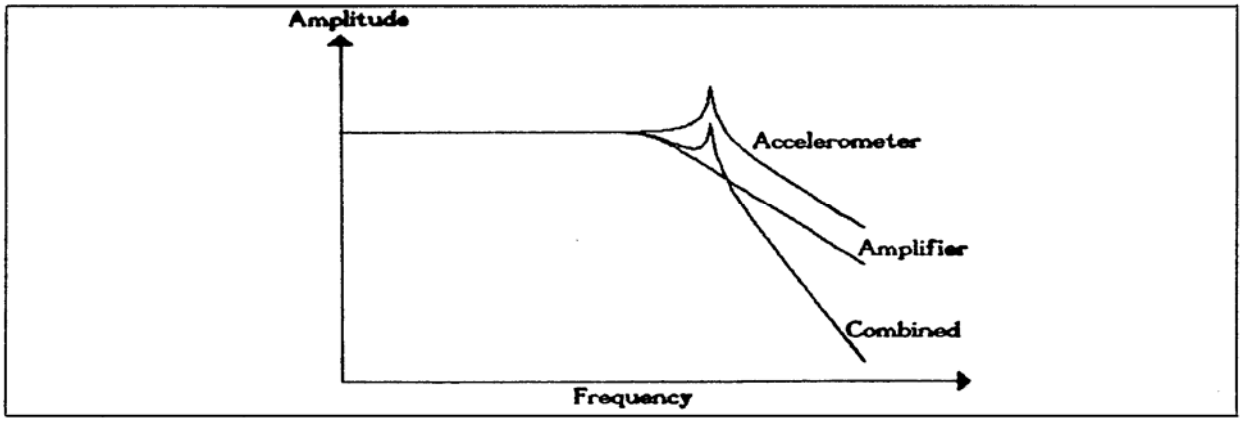

Figure 1-18. Acceleration measuring system frequency response.

1.8.2.3 Procedure. Because piezoelectric transducers do not have zero-frequency response, a precision ac-signal generator must be employed to perform a dynamic calibration. Charge-mode calibrations have the additional requirement for a capacitor whose value is precisely known.

1.8.2.3.1 Voltage Mode. The sensitivity of the piezoelectric transducer is ascertained by dividing coulombs by applied measurand or by dividing the open-circuit voltage by the applied measurand. The latter is the sensitivity of the transducer before it is attenuated by shunt capacitance. This sensitivity should then be multiplied by the calibration levels desired to obtain the total charge outputs (Q_0) or open-circuit voltage outputs (E_p) from the transducer. The calibration signal required at the amplifier (E_0) will be either

$$\frac{Q_0}{C_p + C_c + C_a + C_d} \quad \text{or} \quad \frac{E_p C_p}{C_p + C_c + C_a + C_d} \text{volts} \tag{1-2}$$

The ac signals selected to be within the capability of the measurement system are inserted directly into the amplifier and recorded at the output.

1.8.2.3.2 Charge Mode. The sensitivity of the piezoelectric transducer is ascertained by dividing coulombs by applied measurand or by dividing the open-circuit voltage by the applied measurand. The latter is the sensitivity of the transducer before it is attenuated by shunt capacitance. This sensitivity should then be multiplied by the desired calibration levels to obtain the total charge outputs (Q_0) or open-circuit voltage outputs (E_p) from the transducer. Multiplying E_p times the crystal capacitance (C_p) will also provide a determination of Q_0.

The desired charge levels are simulated by inserting ac voltage signals, selected to be within the capability of the instrumentation system, through a series capacitance, and directly into the charge amplifier. The values of the input-voltage levels and series capacitance selected should be such that their product is equal to the desired charge inputs. The signal is recorded at the output.

1.8.2.3.3 Series Voltage Insertion. An alternate method to breaking the transducer-cable-amplifier interface involves inserting a known voltage across a series resistor into the low or common side of the cable signal path. Such a procedure can be used with either charge or voltage amplifiers. This method offers the obvious advantage of ensuring continuity of the transducer-cable-amplifier circuit both before and after calibration. Manufacturers have encouraged use of this technique by providing "T" junctions or cable inserts for this purpose. When using this technique, the following points should be kept in mind:

(1) Only one low or common side should be present in the voltage insertion system. This method requires an isolated transducer, insulated mounting, or physical removal of the transducer from instrument ground. Preferably, the calibration voltage is isolated from system ground.

(2) The required voltage signal level for signal insertion into a charge amplifier is

$$\frac{Q_0}{C_p + C_c + C_a + C_d} \quad or \quad \frac{E_p\ C_p}{C_p + C_c + C_a + C_d} \quad volts \tag{1-3}$$

(3) The required voltage signal level for insertion into the input cable of a voltage amplifier is

$$\frac{E_p\left(C_p + C_1\right)}{C_p + C_1 + C_2} \tag{1-4}$$

where:

C_1 = cable capacitance between the transducer and the calibration source

C_2 = cable capacitance between the transducer and the amplifier input

(4) The series resistor in the low or common side of the signal path should be no greater than 100 ohms.

1.9 Calibration Check - Substitute-Measurand Calibration of Systems with Servo Transducers Test

1.9.1 Purpose. The substitute-measurand method is used to check calibrate systems that use servo transducers incorporating a self-test coil.

1.9.1.1 Servo-Transducer Operation. A servo transducer consists of a seismic system, displacement mechanism, and matched electronics that form a closed-loop feedback system. The seismic system attempts to be displaced at a rate proportional to the mechanical input. This displacement is sensed by the displacement mechanism and a restoring current is passed through a forcer coil, generating a force sufficient to maintain the seismic mass at its original null position. This restoring current is also passed through a resistor, producing an output voltage that is proportional to the mechanical input.

1.9.1.2 Test Coil. Most servo transducers can be acquired with a test coil constructed internally, that is, independent of the forcer coil. Applying a current to the test coil subjects the seismic mass to a magnetic force and exercises the working mechanisms of the transducer in the same manner as the measurand input.

1.9.2 Test Equipment.

- precision current source
- precision voltage source
- precision resistors

1.9.3 Procedure. Following laboratory calibration of a servo transducer, pass known currents through the test coil to generate an equivalent measurand input. Establish the sensitivity of the

test coil in units of amperes/mechanical input. System calibration at the time of actual test is accomplished by applying the current to the test coil.

1.10 Calibration Check - Electrical-Substitution Calibration of Systems with Transducers Using Reactive Elements (Capacitors or Inductors) Test

1.10.1 Purpose. Electrical-substitution tests calibrate the remainder of the telemetry system by simulating expected outputs from transducers using reactive components.

1.10.2 Test Equipment. The equipment used is dependent upon the terminal or output characteristics or both of the particular transducer. Equipment such as the following may be required:

- precision voltage source
- precision frequency source
- precision resistors, capacitors, or inductors

1.10.3 Procedure. Output signals for the transducer replaced can be simulated under static and dynamic conditions to test the response of the rest of the system if a complete characterization of the transducer's output properties is possible. First, a physical calibration of the transducer must be performed. Then the model is connected in place of the transducer and exercised in steps through the same output range as the transducer. The step values of the model are correlated to engineering-unit values for use in the end-to-end system calibration.

1.11 Calibration Check - Electrical-Substitution Calibration of Systems with Thermoelectric Transducers Test

1.11.1 Purpose. Electrical-substitution tests calibrate the remainder of the telemetry system by simulating expected outputs from thermoelectric transducers.

1.11.2 Thermocouple Types. Some factors must be determined before a voltage is inserted into a thermocouple temperature measuring system. Among the many types of thermocouples, some of the more common ones are Type J: Iron-Constantan, Type K: Chromel-Alumel, Type T: Copper-Constantan, Type E: Chromel-Constantan, Type R: Platinum 13 percent Rhodium, and Type S: Platinum 10 percent-Rhodium. All types of thermocouples have a set of reference tables containing millivolt output per degree over a specified temperature range. Each reference table has a cold-junction reference temperature such as 32ºF, 150°F, or 0°C. Circular 561, *Reference Tables for Thermocouples*, is the most common source for such tables. The NIST Monograph 125, *Thermocouple Reference Tables Based on the IPTS 68*, is another related set of reference tables.

1.11.3 Test Equipment. Some of the types of equipment required are

- thermocouple calibrator/simulator
- precision voltage source
- precision potentiometer

A voltage source is selected after determining the type of thermocouple, the reference junction, and the correct reference table. This source is usually a thermocouple calibrator or precision potentiometer containing a standard cell and adjustment circuits. The internal voltage of the standard cell can be varied using the precision potentiometer, thus supplying a precise variable voltage output.

1.11.4 Procedure.

1.11.4.1 Thermocouple Calibrator. Many models of thermocouple simulators/ calibrators are available. Each has specific operating instructions and varying features. Some models are equipped with probes for each different thermocouple type, while others employ sophisticated circuitry to compensate for the temperature at the device connection point. In general, the thermocouple to be calibrated is disconnected and replaced by the calibrator. For direct reading models (simulation temperature selected), the proper thermocouple type, reference-junction temperature, and simulation/calibration temperature are selected. For millivolt output devices, the correct thermocouple-type probe is connected and the proper reference table values selected.

1.11.4.2 Precision Potentiometer. Disconnect the thermocouple from the system to be calibrated or checked and connect the voltage source, observing the correct polarity. If extension lines are used to connect the source to the system, the lines should be as short as possible and of the same material as the thermocouple. If the temperature at the potentiometer is different from the reference junction, a correction must be made to use the reference table. An accurate thermometer is required for measuring this temperature. From the chart, determine the millivolt equivalent of this temperature. Add this voltage algebraically to all the millivolt settings to be used in the system testing. Some precision potentiometers have provisions for making this reference junction correction factor. Advantages of the precision potentiometer are its capability for being used with any thermocouple type and reference junction chart. However, it is difficult to use and not always available in the field because it is a delicate laboratory-type instrument.

1.12 Calibration Check - Electrical-Substitution Calibration of Systems with Transducers Using Integral Electronics Test

1.12.1 Purpose. Electrical-substitution tests calibrate the remainder of the telemetry system by simulating expected outputs from transducers that condition the sensor output with integral electronics.

1.12.2 Test Equipment. The equipment used is dependent upon the terminal or output characteristics of the particular transducer. Equipment such as the following may be required:

- precision voltage source
- precision frequency source
- precision resistors, capacitors, or inductors

1.12.3 Procedure. Output signals for the transducer replaced can be simulated under static and dynamic conditions to test the response of the rest of the system if a complete characterization of

the transducer's output properties is possible. First, a physical calibration of the transducer must be performed. Then the model is connected in place of the transducer and exercised in steps through the same output range as the transducer. The step values of the model are correlated to engineering unit values for use in the end-to-end system calibration.

This page intentionally left blank.

CHAPTER 2

CHARGE AMPLIFIERS

2.1 General

This chapter presents test procedures to measure specific input and output parameters of telemetry signal conditioning charge amplifiers. Performance limits are not specified, because they may vary with the intended application. The test procedures in this chapter are included to avoid ambiguities that might exist in test procedures used by different agencies and manufacturers.

2.2 Charge Amplifier General Characteristics

A charge amplifier is a circuit whose input impedance is a capacitance that provides very high impedance at low frequencies. Charge amplifiers provide low impedance output voltage that is proportional to the input charge, usually provided by a piezoelectric transducer. The transducer, which is a self-generating unit, provides an output charge proportional to the input stimulus. This stimulus, for example, could be acceleration or pressure. For any transducer, the charge generated is independent of external capacitance attached to its output.

A charge amplifier can be broken down into two sections: the charge converter and the voltage gain amplifier. The charge converter section changes input charge to a voltage that appears to have a capacitive input impedance large enough, so variations in transducer and cable capacitance are insignificant. The voltage gain amplifier section takes the voltage from the charge converter, gains this voltage, and provides a low impedance millivolt output. The overall transfer function for a charge amplifier is

$$A_q = \frac{V_o}{Q_{in}} \tag{2-1}$$

where:

A_q = charge gain in mV/pC
Q_{in} = input charge in pC
V_o = output voltage in mV

Some of the terms used with charge amplifiers are defined in the following subparagraphs.

2.2.1 Single-Ended Input. An input circuit configured so that one line of the input is electrically connected directly to one line of the output.

2.2.2 True-Differential Input. A symmetrical input circuit configured so that both input lines have equal impedance and transfer characteristics with respect to the amplifier grounding structure. Either side of the input may be electrically connected to the output "common" without preference.

2.2.3 Quasi-Differential Input. An input circuit configured to provide electrical characteristics similar to those of a true differential input over a narrow range of operating conditions. The lack

of symmetry in the input circuit with respect to ground preference distinguishes this configuration from the true differential input.

2.2.4 Power Supply Isolation. The absence of a direct electrical connection between any line of power supply and the amplifier common. Isolation is frequently employed to avoid circulating ground currents, which results in the introduction of noise in the input circuitry of the amplifier.

2.3 General Test Conditions

The following test conditions are typical. In the event specifications differ from values shown, appropriate changes should be made.

2.3.1 Test Equipment Primary Input Power.

110-120 volts, ± 0.25 percent regulation, 60 Hz

2.3.2 Warm-up.

Solid state: specified warm-up time
Test equipment: 60 minutes

2.3.3 Test Environment: Ambient.

Temperature: (23 ±3)ºC
Relative humidity: 40 to 60 percent

2.3.4 Input Signal. The signal is fed through a series capacitor whose value will not degrade any performance parameter beyond the limits of the specification. Shunt resistance, if present, is specified as the minimum source resistance that will not degrade any performance parameter beyond the limits of the specification.

2.4 Test Equipment

Typical laboratory equipment is shown in test procedure diagrams. The following pieces of equipment are required to perform the test procedures in this chapter. Additionally, Figure 2-1 is shown as an example setup diagram that is referred to within this chapter.

Equipment	Specifications
Power supply	0-40 V dc, 500 mA, regulated
Audio oscillator	0-20,000 Hz, 0-2 V rms
Oscilloscope, digital storage	standard laboratory model
Oscilloscope if available	
Voltmeter, a/c, true rms	0-10 V rms, ±0.1 percent accuracy
Pulse generator	standard laboratory model
Phase meter	standard laboratory model
Distortion or spectrum analyzer	standard laboratory model, spectrum analyzer capable of total harmonic distortion (THD) measurement

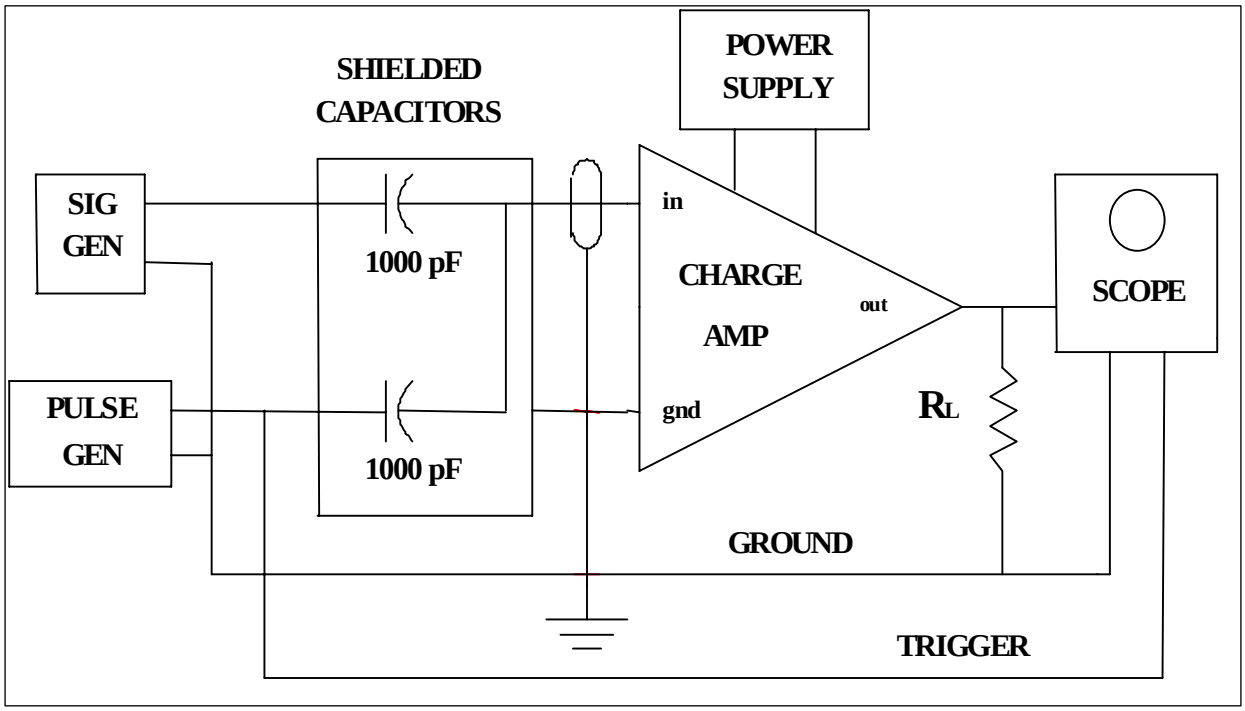

Figure 2-1. Block diagram for overload recovery test.

2.5 Overload Recovery Test

2.5.1 Purpose. This test determines the time required for the charge amplifier to recover from a specified transient overload. It is specified as the maximum allowable number of microseconds from the end of the input transient to the time that the amplifier transfer characteristic stabilizes to within ±5 percent of full-scale output.

2.5.1.1 The input transient overload must be specified with respect to its amplitude, duration, and pulse shape. In cases where the expected input overload is known and can be reasonably well simulated on laboratory instruments, it should be specified as the overload condition. If the expected overload is not known, a half-sine pulse, whose duration is short compared to the low frequency time constant of the charge amplifier, is employed.

2.5.1.2 The overload recovery time is expressed as "_____ microseconds, maximum, to output voltage stabilization with ±5 percent full scale output and transfer characteristic recovery within ±5 percent of its original value for an input half-sine pulse of _____ picocoulombs amplitude and _____ micro-seconds pulse width at a charge amplifier gain of _____."

2.5.2 Test Equipment. See paragraph 2.4.

2.5.3 Test Method.

2.5.3.1 Setup. Connect test equipment as shown in Figure 2-1.

2.5.3.2 Conditions. Refer to paragraph 2.3.

2.5.3.3 Procedure.

2.5.3.3.1 Set the sine wave charge input to 10 percent of full scale and to a frequency equal to 90 percent of the upper limit of the charge amplifier passband (see paragraph 2.9).

2.5.3.3.2 Apply an overload charge of a half-sine pulse of duration and peak amplitude determined from the specification. The circuit is so arranged that initiating the overload pulse will trigger the oscilloscope. The charge amplifier's recovery from the overload condition is evidenced by appearance of the sine wave on the oscilloscope. The recovery time is measured as the time duration from the termination of the input overload pulse until both the transfer characteristic and the output voltage stabilize to within ±5 percent of the required values.

2.6 Gain Test

2.6.1 Purpose. This test determines and verifies the charge amplifier gain. Gain is defined as the slope of the least squares straight line established through the linear portion of the output voltage versus input charge characteristic of the charge amplifier. The ability of the line to fit the points on the gain curve is the gain linearity (usually given as a percentage). Gain is expressed in millivolts per picocoulomb.

2.6.2 Test Equipment. See paragraph 2.4.

2.6.3 Test Method.

2.6.3.1 Setup. Connect equipment as shown in Figure 2-1. The 1000 picofarad series input capacitor should have a tolerance of ±1 percent or better.

2.6.3.2 Conditions. Unless otherwise required, the charge amplifier is set at maximum gain with a load equal to the maximum specified load.

2.6.3.3 Procedure.

2.6.3.3.1 Set oscillator to 100 Hz.

2.6.3.3.2 Take a series of input and output voltage readings over the linear output voltage range of charge amplifier. Adjust input oscillator for a different amplitude for each pair of values. At least 10 data points should be obtained.

2.6.3.3.3 Express both input and output voltages in millivolts. Compute the least squares straight line from these values. The slope is the gain in millivolts per picocoulomb.

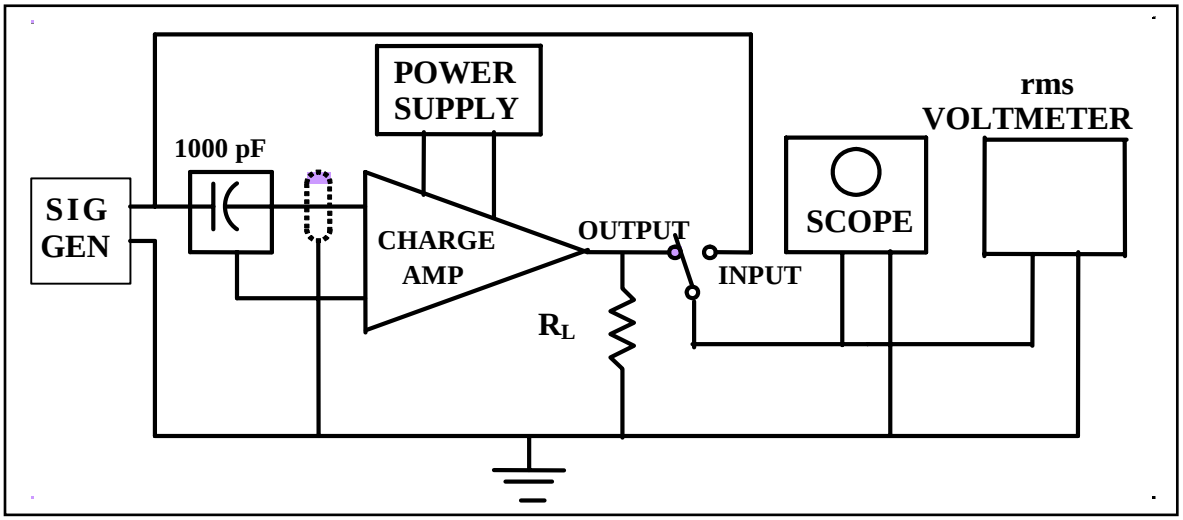

Figure 2-2. Block diagram for gain test.

2.7 Gain Stability with Source Capacitance Test

2.7.1 Purpose. This test determines the gain stability of the amplifier with source capacitance. Gain stability with source capacitance is defined as the change in the amplifier gain as a function of source capacitance for any gain in the specified range. Source capacitance is the total external capacitance, which is the transducer output capacitance plus the cable capacitance. It is specified as the maximum allowable change in gain per 1000 picofarads change in source capacitance and is expressed as "_____ percent, maximum, per 1000 picofarads."

2.7.2 Test Equipment. See paragraph 2.4.

2.7.3 Test Method.

2.7.3.1 Setup. Connect equipment as shown in Figure 2-3.

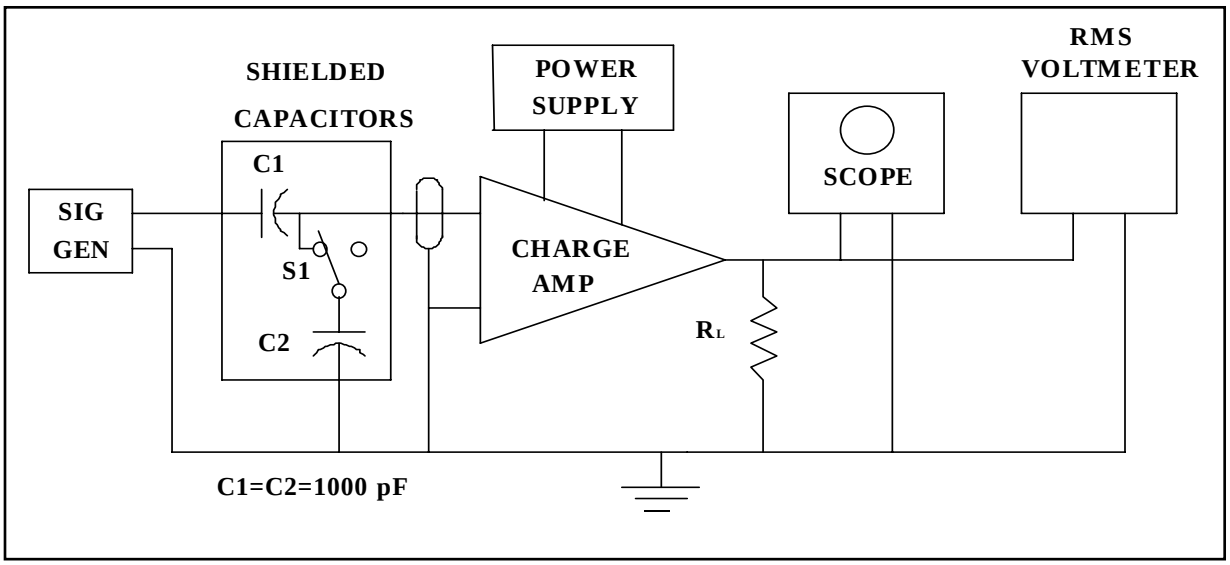

Figure 2-3. Block diagram for gain stability test.

2.7.3.2 Conditions. Unless otherwise required, the charge amplifier is set at maximum gain with a load equal to the maximum specified load.

2.7.3.3 Procedure

2.7.3.3.1 Set oscillator to 100 Hz.

2.7.3.3.2 Set input amplitude to a convenient value to maintain amplifier output voltage within its linear voltage range.

2.7.3.3.3 Read voltage output with switch S1 open (E1) and again with switch S1 closed (E2).

2.7.3.3.4 Gain stability with source capacitance variation is determined as follows:

$$\text{Percent per 1000 pF} = \frac{E2 - E1}{E1} \bullet 100 \qquad (2\text{-}2)$$

2.8 Gain Stability with Temperature Test

2.8.1 Purpose. This test determines the amplifier gain stability with temperature. Gain stability with temperature is defined as change in the amplifier gain as a function of temperature for any gain in the specified gain range. It is specified as the maximum allowable change in gain because of temperature changes from (23 ±3)°C to the low and high temperature extremes and is expressed as "± _____ percent maximum, referred to (23 ±3)°C, over the temperature range from _____ to _____ °C."

2.8.2 Test Equipment. See paragraph 2.4.

2.8.3 Test Method.

2.8.3.1 Setup. Connect equipment as shown in Figure 2-2.

2.8.3.2 Conditions. Unless otherwise specified, the charge amplifier is set at maximum gain with a load equal to the specified resistive load.

2.8.3.3 Procedure.

2.8.3.3.1 Set oscillator to 100 Hz.

2.8.3.3.2 Set oscillator amplitude to give a convenient amplifier output voltage within the linear output voltage range.

2.8.3.3.3 Using the method outlined for measuring gain (paragraph 2.3), obtain the gain at (23 ±3)°C. This gain shall be used as the reference.

2.8.3.3.4 Temperature soak amplifier for a specified time per applicable military environmental standards at specified temperature limits.

2.8.3.3.5 Obtain gain for both maximum and minimum temperature limits using method outlined in subparagraph 2.3.3.

2.8.3.3.6 Determine gain stability with temperature variations by:

$$\text{Percent} = \frac{\text{Gain (max or min)} - \text{Gain}\left(23 \pm 3\right)^{\circ}\text{C}^{\circ}}{\text{Gain}\left(23 \pm 3\right)^{\circ}\text{C}} \qquad (2\text{-}3)$$

2.9 Frequency Response Test

2.9.1 Purpose. This test determines the amplifier frequency response. Amplifier frequency response is defined as the variation in the charge amplifier gain as a function of frequency for a sinusoidal input over a stated range of frequencies. This amplifier frequency response is specified by establishing the flatness tolerance, referred to some reference frequency within the passband and the frequency limits required. The passband is that spectrum of frequencies over which the charge amplifier is required to uniformly amplify the input signal within relatively narrow limits of error. The preferred form for expressing the specification is "flat to within ±_____ percent, referred to _____Hz, from _____Hz to _____Hz." An acceptable alternative form of expressing the specification is "flat to within ±_____dB, referred to _____Hz, from _____Hz to _____Hz." The charge amplifier is required to meet the frequency response specifications for any signal amplitude within the linear output voltage range and independently of the specification on slew rate.

2.9.1.1 It is generally necessary in telemetry systems to specify the roll-off characteristics of the amplifier at each end of the passband. The low frequency attenuation determines the amplifier low frequency time constant that must be low enough to maintain integrity of the pulse input expected and yet high enough to limit zero signal drift when the mating transducer exhibits pyro-electric

effects. The high frequency attenuation is selected to avoid the effects of adjacent channel interference and to attenuate high frequency noise in the system.

2.9.1.2 When it is necessary to specify filtering, it shall be treated as a complement to the specification on frequency response rather than a replacement for that specification. Filtering parameters are expressed as "the low frequency attenuation shall be a minimum of _____dB at all frequencies less than _____Hz referred to _____Hz; the high frequency attenuation shall be a minimum of _____dB at all frequencies greater than _____Hz referred to _____Hz."

2.9.2 Test Equipment. See paragraph 2.4.

2.9.3 Test Method.

2.9.3.1 Setup. Connect equipment as shown in Figure 2-2.

2.9.3.2 Conditions. Refer to subparagraph 2.3.

2.9.3.3 Procedure.

2.9.3.3.1 Adjust oscillator frequency to 100 Hz.

2.9.3.3.2 Set gain of amplifier at a value equal to approximately 1/2 maximum gain with a resistive load equal to specified load. Set oscillator amplitude to give a convenient amplifier output voltage within linear output voltage range.

2.9.3.3.3 Maintain a constant input voltage amplitude as established in subparagraph 2.9.3.3.2 and sweep or step oscillator over the specified amplifier bandwidth.

2.9.3.3.4 Measure voltage output over amplifier passband in convenient frequency steps, including lower and upper specified band limits. Determine amplifier passband using above measurements.

2.9.3.3.5 If filtering is an integral part of the charge amplifier, extend measurement frequencies to determine filter attenuation.

2.10 Phase Response Test

2.10.1 Purpose. This test determines the phase response of the charge amplifier. Phase response is defined as the phase of the output voltage relative to the phase of the input charge as a function of frequency. Phase response becomes important when shock data or vibration modal information is being studied. Shock data are generally best preserved by specifying that the low pass filter used for high frequency attenuation in the charge amplifier has a linear phase response within the passband. This will preserve the original phase relationship between the spectral components of the shock pulse. Model studies are best made near zero phase shift conditions since a stable phase reference is needed to identify 90º-phase shifts at resonances. It should be recognized that design

tradeoffs are involved when both phase and frequency responses are specified and an intelligent choice depends upon the application.

2.10.2 Test Equipment. See paragraph 2.4.

2.10.3 Test Method.

2.10.3.1 Setup. Connect equipment as shown in Figure 2.4.

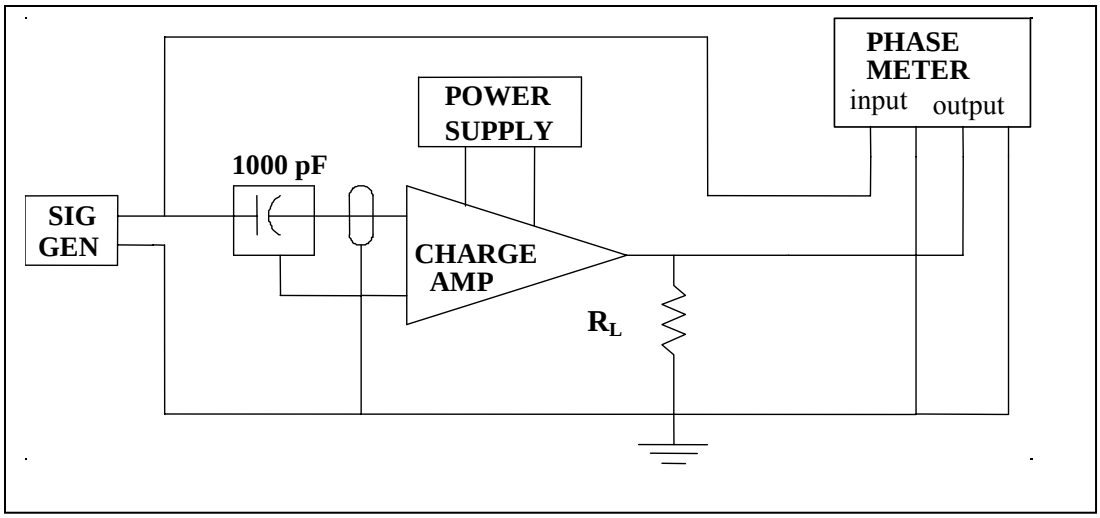

Figure 2-4. Block diagram for phase response test.

2.10.3.2 Conditions. Refer to paragraph 2.3. The resistive load should be equal to the maximum specified load.

2.10.3.3 Procedure.

2.10.3.3.1 Adjust oscillator so that amplifier output voltage lies in its linear range and so that the frequency is within the passband of the amplifier.

2.10.3.3.2 Measure phase shift at upper and lower band limits and at intermediate points as required.

2.11 Output Impedance Test

2.11.1 Purpose. This test measures the output impedance. Output impedance is defined as the effective internal impedance in series with the output terminals when the charge amplifier is operated in its specified range. The value of acceptable output impedance is generally selected on the basis of loading effects and is expressed as "_____ ohms, maximum."

2.11.2 Test Equipment. See paragraph 2.4.

2.11.3 Test Method.

2.11.3.1 Setup. Connect equipment as shown in Figure 2-5.

2.11.3.2 Conditions. Refer to paragraph 2.3.

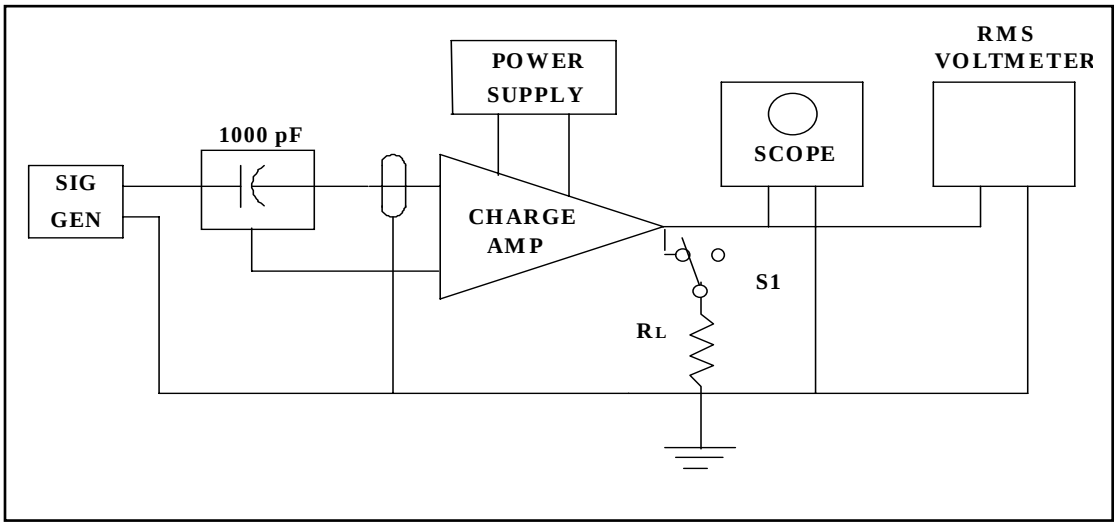

Figure 2-5. Block diagram for phase response test.

2.11.3.3 Procedure.

2.11.3.3.1 Set amplifier to maximum gain and terminate in the maximum rated load resistance for the amplifier.

2.11.3.3.2 With switch S1 in the no-load condition, adjust input voltage using a sine wave to drive the amplifier to the linear output voltage limits. Note output voltage as indicated on rms meter.

2.11.3.3.3 Load amplifier by closing switch S1 and again note output voltage as indicated on rms meter.

2.11.3.3.4 Make this measurement at lowest and highest passband frequencies and at mid-range frequency.

2.11.3.3.5 Determine output impedance by

$$Output\ Impedance = \frac{volts\ (no\text{-}load) - volts\ (under\text{-}load)}{volts\ (under\text{-}load)} \bullet R_L \qquad (2\text{-}4)$$

where R_L is transmission line resistance.

2.12 Residual Noise Test

2.12.1 Purpose. This test measures charge amplifier residual noise. Charge amplifier residual noise is defined as the dynamic voltage measured at the output terminals of the charge amplifier for given conditions of source capacitance, source resistance, gain, and measurement bandwidth when the amplifier is operating without an input charge signal. Residual noise is generally divided into two categories: referred to input (RTI) and referred to output (RTO). The RTI noise has two components: a constant residual noise plus noise caused by source capacitance. These components add algebraically to produce the total RTI noise. Since RTI noise must be measured at the output, it varies directly with gain. The RTO noise is defined as that part of the residual noise that remains fixed with gain. Total noise is expressed as "a minimum of _____ picocoulombs rms constant residual noise plus _____ picocoulombs rms per 1000 picofarads source capacitance RTI and _____ millivolts rms RTO."

2.12.2 Test Equipment. Refer to paragraph 2.4.

2.12.3 Test Method.

2.12.3.1 Setup. Connect equipment as shown in Figure 2-6.

2.12.3.2 Conditions. Refer to paragraph 2.3.

2.12.3.3 Procedures.

2.12.3.3.1 Set amplifier gain to minimum value. Measure and record noise level at amplifier output (E_{n1}) with switch S1 open.

2.12.3.3.2 Set amplifier gain at maximum value. Measure and record noise level at amplifier output (E_{n2}) with switch S1 open.

2.12.3.3.3 With amplifier gain still set to maximum value, measure and record noise level at amplifier output (E_{n3}) with switch S1 closed.

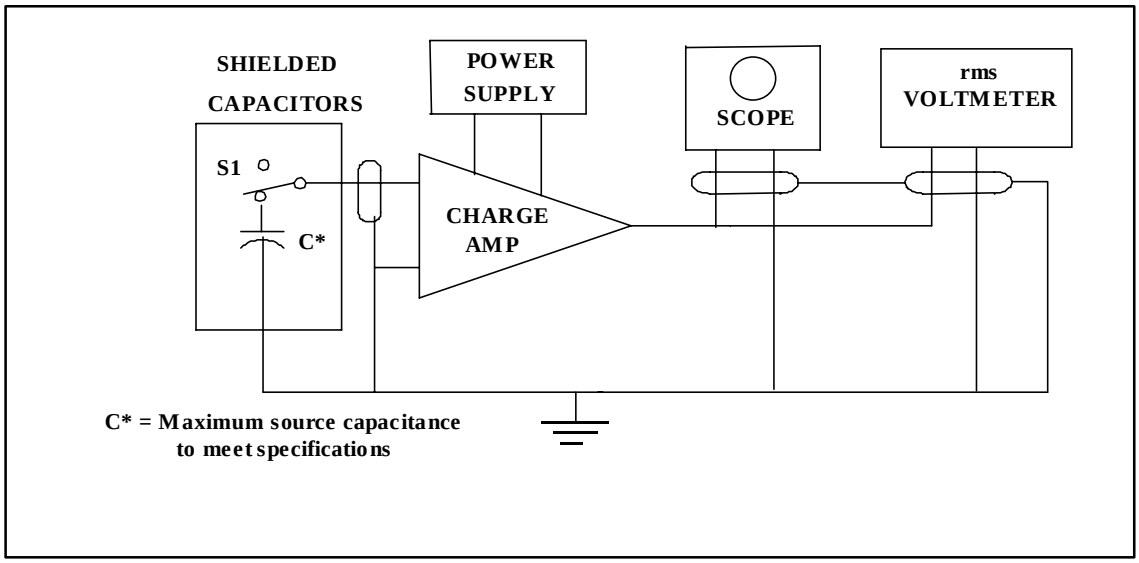

Figure 2-6. Block diagram for residual noise test.

2.12.3.3.4 The following is a simplified equation for the total maximum allowable noise measured at the output:

$$E_n = G\left(Q_R + Q_N C\right) + E_{RTO} \qquad (2\text{-}5)$$

where:

G = amplifier gain in millivolts/picocoulombs

Q_R = rms constant residual noise in picocoulombs

Q_N = specified maximum noise due to source capacitance (RTI) in picocoulombs rms per 1000 picofarads of source capacitance

C = source capacitance (C) in 1000's of picofarads

E_{RTO} = specified maximum residual noise (RTO) in millivolts rms

2.12.3.3.5 In subparagraphs 2.12.3.3.1 and 2.12.3.3.2, $C = 0$ and E_{n1} and E_{n2} must each be less than $E_n = GQ_R + E_{RTO}$ to meet specifications.

2.12.3.3.6 To meet specifications in subparagraph 2.12.3.3.3:

$C \neq 0$ and
E_{n3} must be less than $E_n = G(Q_R + Q_N C) + E_{RTO}$

2.13 Distortion Test

2.13.1 Purpose. This test determines the total harmonic distortion (THD) of the charge amplifier. The THD is defined as the ratio of the power of the fundamental frequency to the power of all other harmonics observed at the output of the charge amplifier. The THD is caused by inherent nonlinearities present in the charge amplifier. The input to the charge amplifier must be a single frequency sinusoid of known power. The preferred form for expressing the specification is in decibels (dB).

2.13.2 Test Equipment. See paragraph 2.4.

2.13.3 Test Method.

2.13.3.1 Setup. Connect equipment as shown in Figure 2-7. Verify switch is in the position to monitor the charge amplifiers output.

2.13.3.2 Conditions. Refer to paragraph 2.3.

2.13.3.3 Procedure.

2.13.3.3.1 Adjust oscillator frequency to 100 Hz.

2.13.3.3.2 Set gain of amplifier to approximately one-half maximum gain into the specified resistive load. Adjust oscillator output amplitude until the charge amplifiers output clips then and decrease by 100 mV.

2.13.3.3.3 Depending on setup, either read the value of THD from the distortion analyzer or use the spectrum analyzer to find THD.

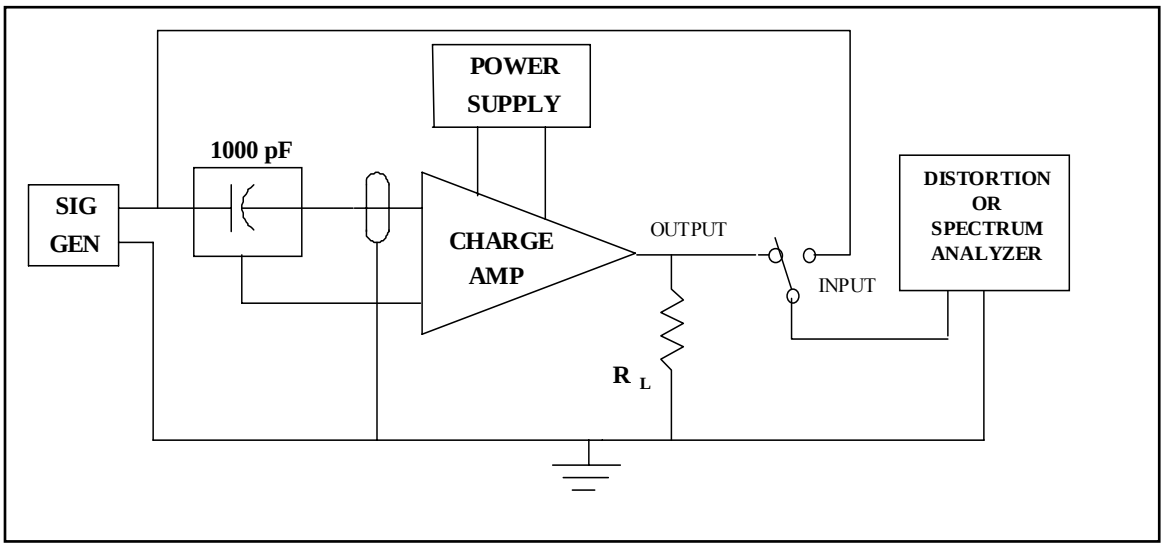

Figure 2-7. Block diagram for distortion test.

This page intentionally left blank.

CHAPTER 3

DIFFERENTIAL DC AMPLIFIERS

3.1 General

A differential dc amplifier is an electronic circuit whose input lines are conductively isolated from the output lines, power, and chassis ground and whose output voltage is proportional to the differential input signal voltage. Both ungrounded input lines of the amplifier have equal impedance and transfer characteristics with respect to the amplifier ground structure. The amplifier has a frequency response from 0 Hz (dc) to a value determined by the bandwidth of the amplifier. The dc amplifier is illustrated in Figure 3-1.

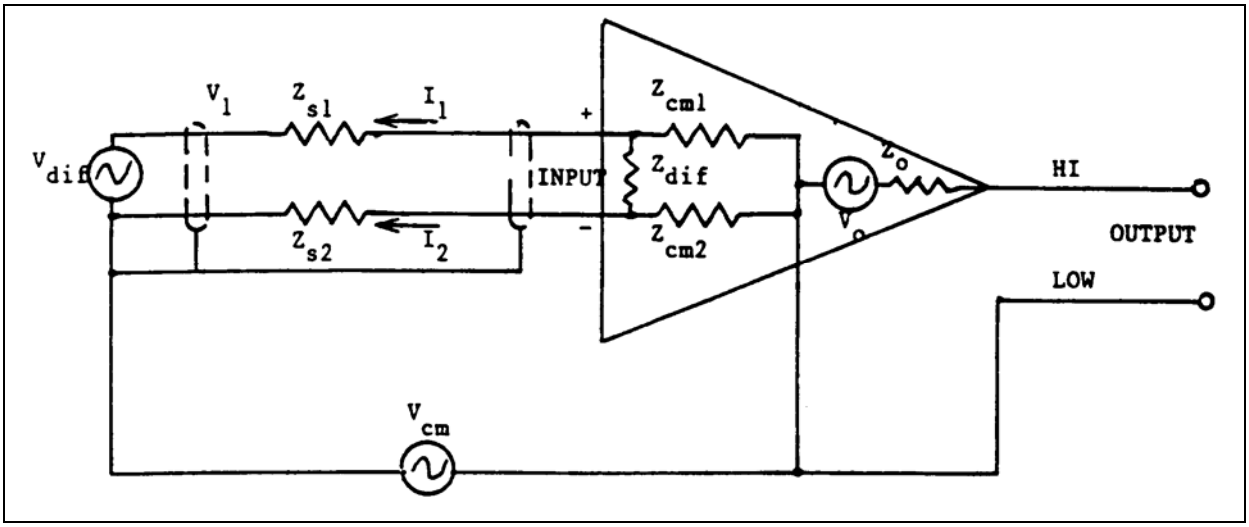

Figure 3-1. Amplifier (dc) circuit.

3.2 Precautions

The following general precautions are recommended when performing dc amplifier tests:

3.2.1 Signal leads, resistors, and switches placed on the amplifier input should be adequately shielded.

3.2.2 Follow the wiring diagrams for each test carefully. All shields, grounds, and common wiring should be connected to one terminal designated system ground.

3.2.3 Except for the overload recovery test, the amplifier power supply should be current limited to a value slightly above the specified amplifier power current.

3.2.4 Each differential input measuring device such as the digital voltmeter (DVM) or oscilloscope should be checked every time it is used to ensure the common mode rejection (CMR) is adequate for the job. Using Figure 3-2, the following procedure verifies the CMR:

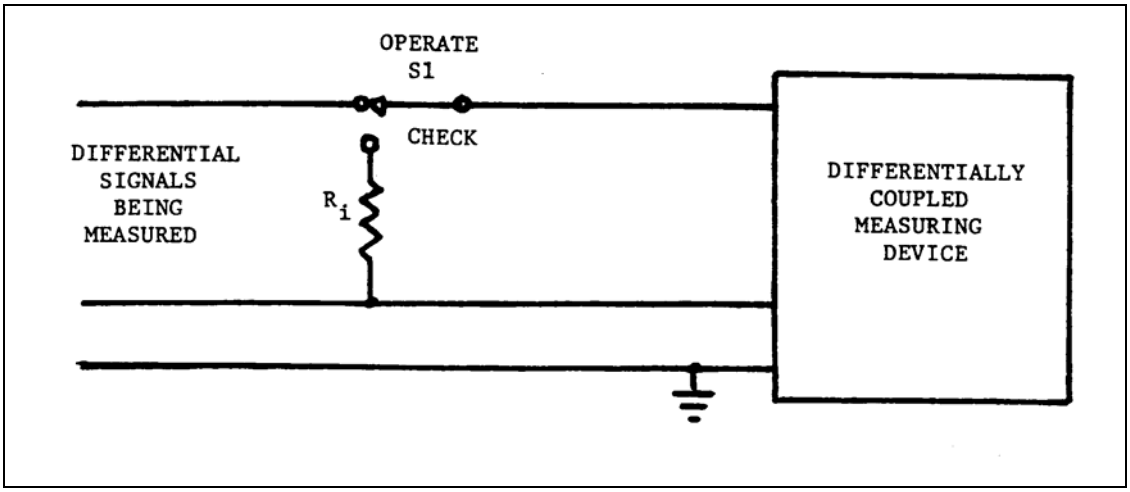

Figure 3-2. Block diagram for check of measuring device CMR.

3.2.4.1 R_i may be zero or may simulate the internal impedance of the source of voltage being measured.

3.2.4.2 In the CHECK position, when R_i simulates the source impedance, any pump-out current or input-bias current flowing from the measuring device is being checked.

3.3 Test Equipment Required

The following test equipment is required to perform dc amplifier tests:

3.3.1 A variable dc input voltage source (a battery with potentiometer is preferred) with a noise factor well below the specified amplifier noise referred to the input.

3.3.2 A power supply which is variable to the amplifier power specifications and is current limited to just above the specified amplifier current drain. Do not use current limiting for the overload recovery test.

3.3.3 A differential input oscilloscope. (A storage scope would be helpful for some tests.)

3.3.4 A DVM with an ac converter and true rms option. Resolution and accuracy specifications should be at least four times that specified for the amplifier.

3.3.5 An ac signal generator with frequency and signal levels adjustable over the range of the amplifier input specification.

3.3.6 A square wave generator with rise and fall times of at least a factor of 10 faster than that specified for the amplifier.

3.3.7 A precision voltage divider; 10 000 ohms or less, input resistance.

3.3.8 A distortion analyzer.

3.3.9 Switches.

3.3.10 Environmental chamber.

3.3.11 Shield box.

3.4 Input Impedance, Differential Test

3.4.1 Purpose. This test determines the input impedance of the amplifier. The input impedance of the amplifier is defined as the impedance seen between the two ungrounded input lines of the amplifier as shown by Z_{dif} in Figure 3-1. The impedance is specified as the minimum impedance that the amplifier will present when operated within its specification.

3.4.2 Test Equipment. Refer to paragraph 3.3.

3.4.3 Test Method.

3.4.3.1 Setup. Connect equipment as shown in Figure 3-3.

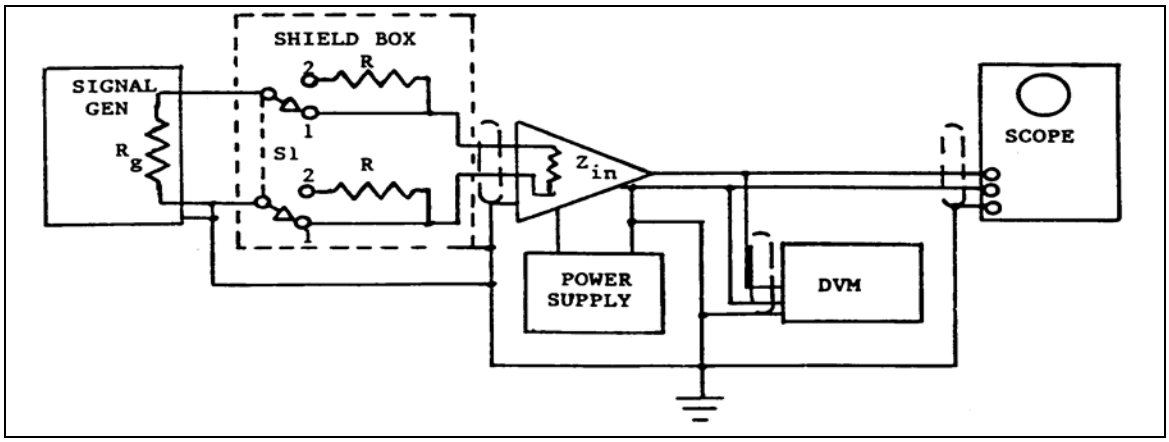

Figure 3-3. Block diagram for input impedance, differential test.

3.4.3.2 Precautions. Refer to paragraph 3.2.

3.4.3.3 Procedure.

3.4.3.3.1 Set power supply to specified operating voltage, set amplifier gain to a midgain value, and observe that amplifier bias is set for a midrange output for a zero signal input.

3.4.3.3.2 Select a value of R which is a nominal 1 percent of manufacturer's specified input resistance.

3.4.3.3.3 With switch S1 in position 1, adjust signal generator for 100 Hz or 50 percent of upper frequency band edge sine wave output (whichever is lower) to obtain 1 V rms at amplifier output. Observe output signal on oscilloscope to ensure a distortion free signal. Record DVM reading as 1.

3.4.3.3.4 Place switch in position 2 and again observe the output signal for distortion. Record DVM reading E_O.

3.4.3.3.5 Calculate differential input impedance from

$$Z_{dif} = Z_{in} = \frac{2RE_O}{1 - E_O} - Rg \tag{3-1}$$

3.4.3.3.6 Vary signal frequency over specified passband of amplifier and calculate change in input impedance [i.e., get $Z_{dif}(f)$].

3.4.3.3.7 Repeat this procedure for minimum and maximum amplifier gain settings [i.e., get Z_{dif} (gain)].

3.5 Common Mode Rejection and Common Mode Voltage Level Test

3.5.1 Purpose. This test determines the amplifier common mode rejection and common mode voltage level. The common mode input voltage is the voltage (represented by V_{cm} in Figure 3-1) that is common with both inputs to the amplifier low output terminal. Common mode rejection is a measure of the conversion of common mode voltage to normal differential signal. It is defined as the ratio (in dB) of the normal mode gain to the common mode gain. Common mode rejection is expressed as

$$\mathrm{CMR} = 20 \log \frac{A_d}{A_{cm}} \tag{3-2}$$

where A_d is the differential voltage gain of the amplifier and A_{cm} is the common mode voltage gain. Balanced input CMR is the CMR that exists when the source impedance is balanced between both input lines. Common mode rejection is specified as the minimum CMR at the specified gain, frequency, and line unbalance. The common mode voltage level is the voltage that the amplifier will tolerate without decreasing the CMR ratio below a specified value or cause the amplifier to cease functioning.

3.5.2 Test Equipment. Refer to paragraph 3.3.

3.5.3 Test Method.

3.5.3.1 Setup. Connect equipment as shown in Figure 3-4. Do not apply high voltage differentially (between the input lines) or leave either signal input lines open. The shield box over the switch and resistor network must be insulated for personnel safety.

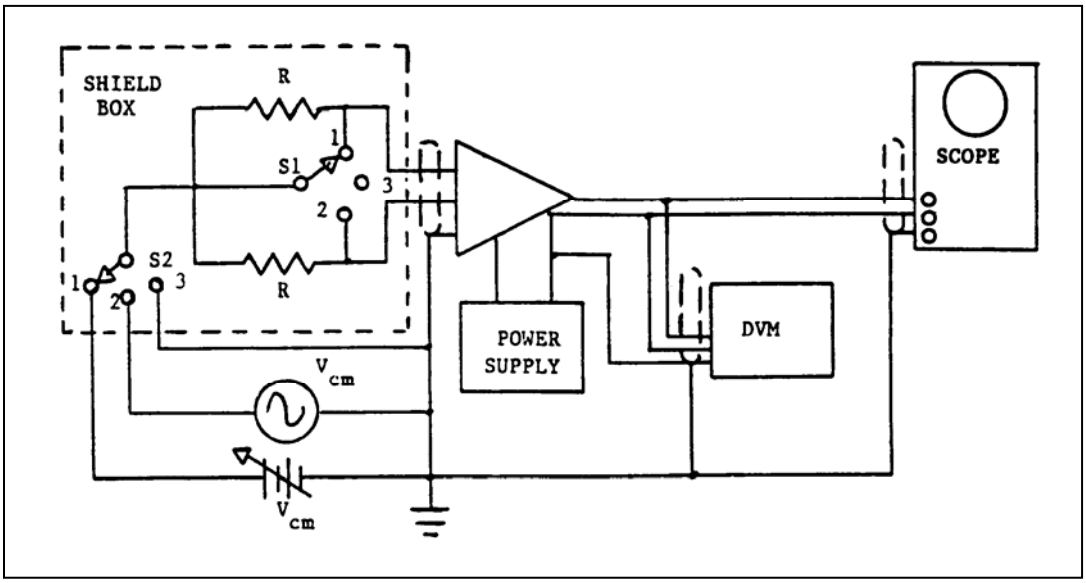

Figure 3-4. Block diagram for common mode rejection test.

3.5.3.2 Precautions. Refer to paragraph 3.2.

3.5.3.3 Procedure.

3.5.3.3.1 Set power supply to specified operating voltage, set amplifier gain to a midgain value (A_d), and observe that the amplifier bias is adjusted for approximately a midrange output for a zero level input signal.

NOTE

The value of R (bridge resistance) should be specified for the amplifier under test. If it is not specified, select a value of 1 k ohms.

3.5.3.3.2 Set S1 to position 1 and S2 to position 3. Record DVM reading E_O.

3.5.3.3.3 Set S2 to position 1 and adjust E_{cm} to the maximum specified common mode test voltage. Record DVM reading E_O.

3.5.3.3.4 Calculate dc common mode voltage gain (A_{cm}) and dc common mode rejection (CMR_{dc}) from

$$A_{cm} = \frac{\Delta E_O}{E_{cm}} \tag{3-3a}$$

$$\mathrm{CMR_{dc}(dB)} = 20 \log \frac{-\mathrm{A_d}}{\mathrm{A_{cm}}} \tag{3-3b}$$

where:

A_d = the normal mode gain and
A_{cm} = the common mode gain of the amplifier.

3.5.3.3.5 Set S2 to position 3 and record output voltage E_O.

3.5.3.3.6 Set S2 to position 2 and adjust signal generator to specified common mode frequency and maximum specified common mode test voltage. Record output voltage E_O.

3.5.3.3.7 Calculate ac common mode voltage gain (A_{cm}) and ac common mode rejection (CMR_{ac}) from

$$A_{cm} = \frac{\Delta E_O}{E_{cm}} \tag{3-4a}$$

$$\mathrm{CMR_{ac}(dB)} = 20 \log \frac{-\mathrm{A_d}}{\mathrm{A_{cm}}} \tag{3-4b}$$

3.5.3.3.8 Set S1 to position 2 and repeat procedure. Repeat this procedure for minimum and maximum gain settings.

3.5.3.3.9 Set S1 to position 3 and repeat all preceding common mode tests for balanced inputs.

3.6 Linearity (dc) Test

3.6.1 Purpose. This test determines amplifier linearity. Amplifier linearity is defined as the maximum deviation from the least squares fit straight line established through the output voltage versus differential input voltage characteristic. The measurement is made at dc with a minimum of 10 equally spaced data points over the entire linear output voltage range. Linearity is expressed as a ±percentage of full-scale output at dc, referred to the least squares fit straight line through the data.

3.6.2 Test Equipment. Refer to paragraph 3.3.

3.6.3 Test Method.

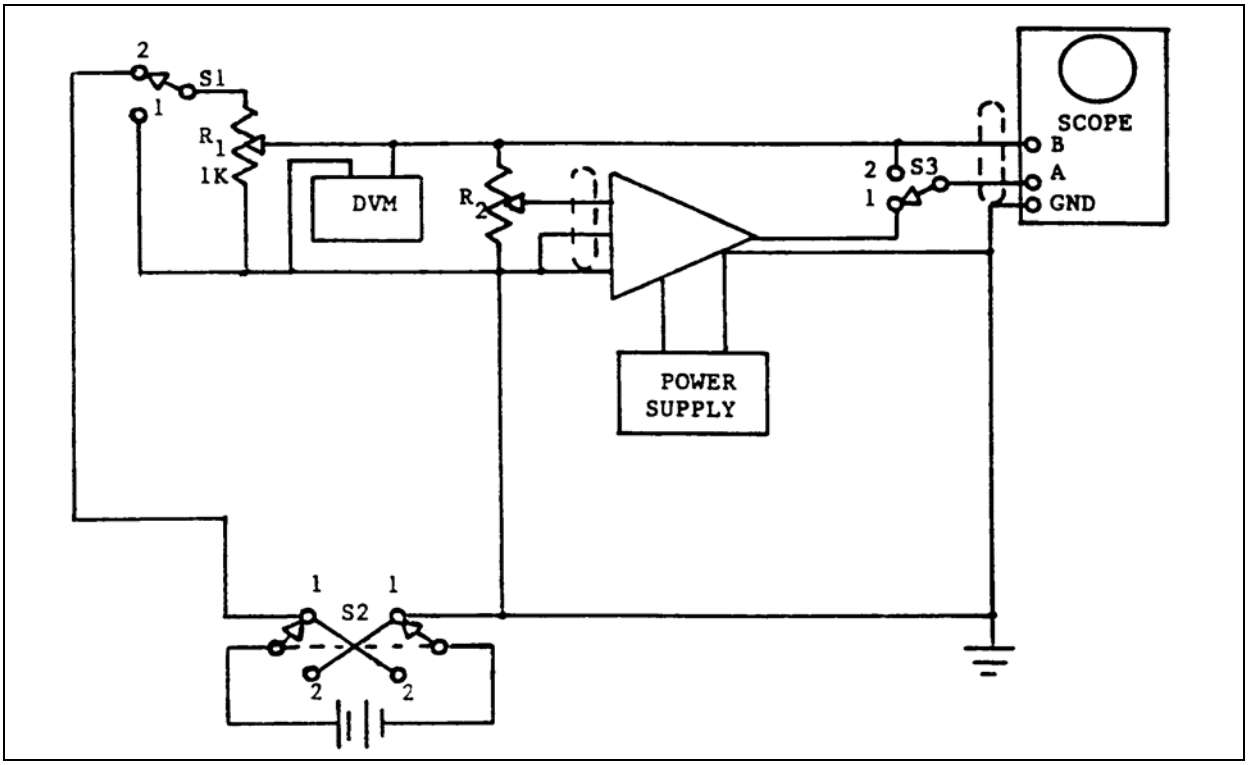

Figure 3-5. Block diagram for linearity test.

3.6.3.1 Setup. Connect equipment as shown in Figure 3-4.

3.6.3.2 Precautions. Refer to paragraph 3.2.

3.6.3.3 Procedure.

3.6.3.3.1 Set power supply to specified operating voltage, set amplifier gain to a mid-gain value, and observe that the amplifier bias is adjusted for approximately mid-range output for a zero-level input signal.

3.6.3.3.2 Set scope for A-B with dc coupling.

3.6.3.3.3 Set S2 to position 1 and S1 to position 2 and adjust R_1, the 1-k potentiometer, to yield a voltage equal to the amplifier full-scale positive output voltage.

3.6.3.3.4 Set S3 to position 2 and switch S1 alternately between positions 1 and 2 while adjusting scope's preamplifier balance adjustment until there is no deflection difference between positions 1 and 2. Then set S1 to position 2 and S3 to position 1.

3.6.3.3.5 Set precision voltage divider, R2, to the reciprocal of the amplifier gain setting (–1/Ad) and adjust scope differential amplifier offset to no deflection on scope.

3.6.3.3.6 With scope trace centered vertically, vary R1 slowly through its entire range and observe oscilloscope trace for a maximum deflection which would indicate the point of maximum nonlinearity.

3.6.3.3.7 By varying R1 and switching S2 to change input voltage polarity, change input voltage over full input range in a minimum of 10 equally spaced increments. Record DVM reading and oscilloscope trace deflection for each of the selected input voltages. To obtain more accurate data use a DVM to measure both voltages.

3.6.3.3.8 From recorded data, compute least squares straight line. The maximum deviation from the line is the linearity error:

$$\textit{The linerarity error (\%FSO)} = \frac{E_{dev}}{E_{fso}} \bullet 100 \qquad (3\text{-}5)$$

where E_{FSO} is the full-scale output voltage.

3.6.3.3.9 Repeat this procedure for minimum and maximum gain settings or any other selected gain settings.

3.7 Gain (dc) Test

3.7.1 Purpose. This test determines the gain of the dc amplifier. Gain is defined as the slope of the least squares straight line established through the output voltage versus the differential input voltage characteristic of the amplifier. The gain range is specified as the minimum and maximum values of gain available from the amplifier without causing any degradation in performance beyond the limits of the specification. The gain is expressed as "the gain shall be selectable from ____ to ____, continuously adjustable." If continuous adjustment of the gain is not required, the separate gain steps should be substituted for the phrase "continuously adjustable."

3.7.2 Test Equipment. Refer to paragraph 3.3.

3.7.3 Test Method.

3.7.3.1 Setup. Connect equipment as shown in Figure 3-6.

3.7.3.2 Precautions. Refer to subparagraph 3.2.

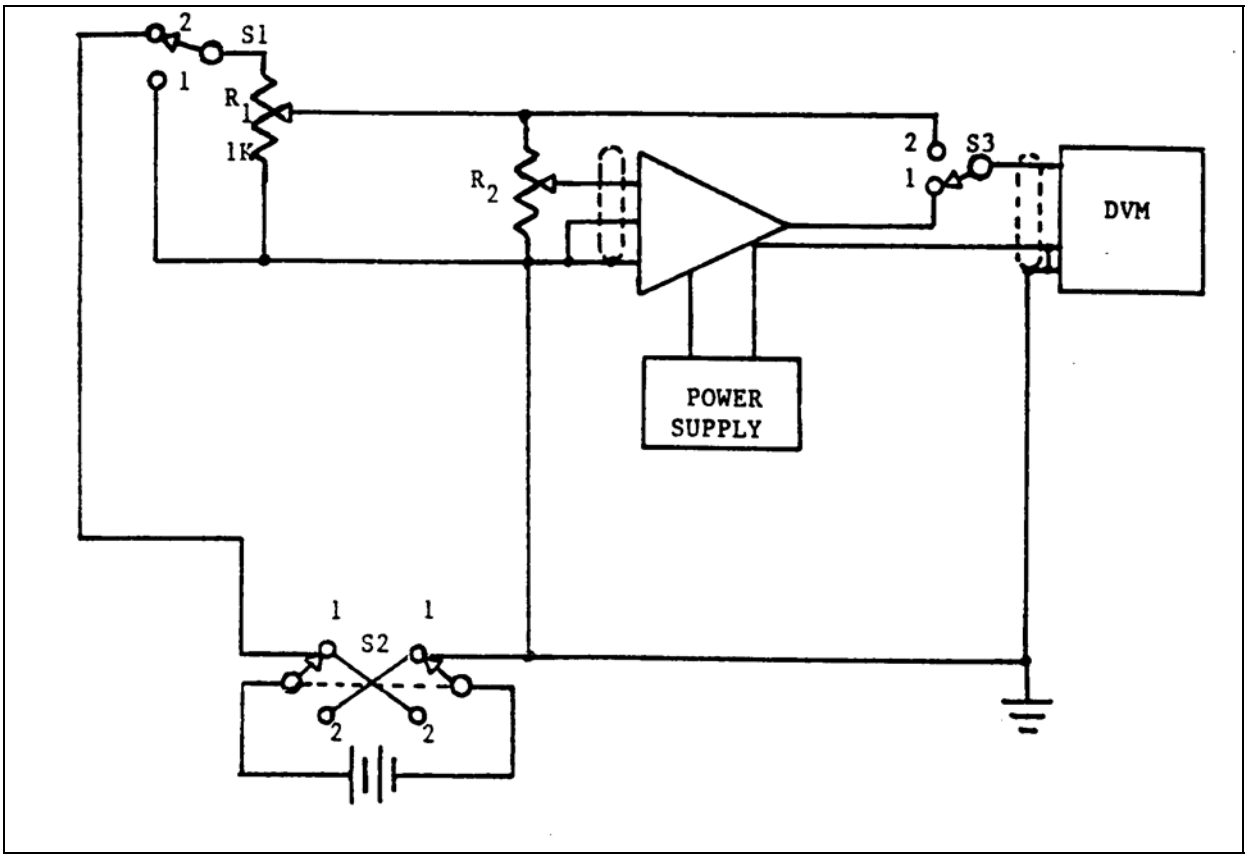

Figure 3-6. Block diagram for gain test.

3.7.3.3 Procedure.

3.7.3.3.1 Set power supply to specified operating voltage, set amplifier gain to a mid-gain value, and observe that the amplifier bias is adjusted for an approximate mid-range output for a zero-level input signal with Sl in position 1.

3.7.3.3.2 Set S2 to position 1, Sl to position 2, and S3 to position 1. Adjust precision voltage divider, R_2, for maximum voltage input to amplifier. Adjust R_1, until DVM reads the full-scale output of the amplifier. Set S3 to position 2 and record DVM reading as V_1.

3.7.3.3.3 Set S3 to position 1. Set precision voltage divider, R_2, to a minimum of 10 equally spaced increments from zero to maximum while recording DVM reading for each increment. (Set S2 to position 2 for negative input voltages.)

3.7.3.3.4 Compute least squares straight line using the recorded input versus output voltage for the amplifier. The gain is the slope of the least squares straight line.

3.7.3.3.5 Repeat this procedure for minimum and maximum gain settings or any other selected gain settings.

3.8 Gain Stability (dc) with Temperature Test

3.8.1 Purpose. This test determines the gain stability with temperature of the dc amplifier. Gain stability with temperature is defined as the change in amplifier gain as a function of ambient temperature for any gain in the specified gain range. It is specified as the maximum allowable change in gain, expressed as a percentage of gain, because of temperature changes from (23 ±3)ºC to the low and high temperature extremes specified.

3.8.2 Test Equipment. Refer to paragraph 3.3.

3.8.3 Test Method.

3.8.3.1 Setup. Connect equipment as shown in Figure 3-7.

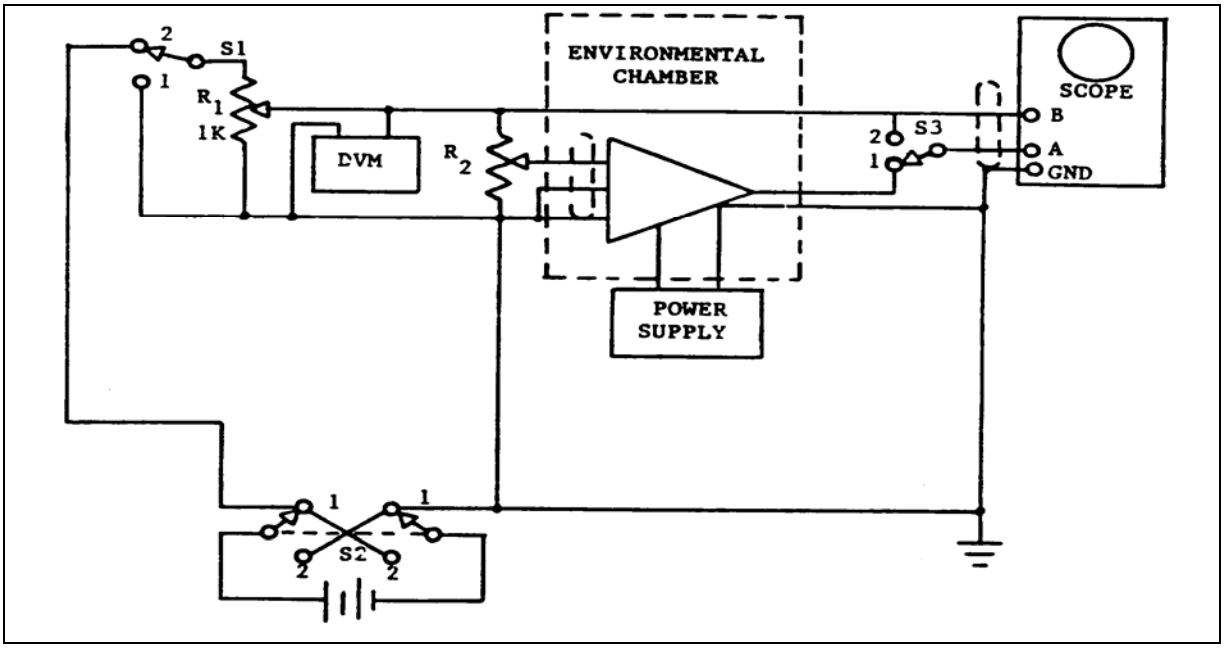

Figure 3-7. Block diagram for gain stability with temperature test.

3.8.3.2 Precautions. Refer to paragraph 3.2.

3.8.3.3 Procedure.

3.8.3.3.1 Place amplifier in environmental chamber and set temperature to (23 ±3)ºC.

3.8.3.3.2 Set power supply to specified operating voltage, set amplifier gain to a mid-gain value, and observe that amplifier bias is adjusted for approximately zero output voltage for a zero-level input signal.

3.8.3.3.3 Set scope for A-B with dc coupling.

3.8.3.3.4 Set S2 to position 1 and Sl to position 2 and adjust R_1, to yield a voltage equal to approximately 75 percent of the amplifier full scale positive output voltage.

3.8.3.3.5 Set S3 to position 2 and switch Sl alternately between positions 1 and 2 while adjusting the scope's preamplifier balance adjustment until there is no deflection between Sl positions 1 and 2. Then set Sl to position 2 and S3 to position 1.

3.8.3.3.6 Set precision voltage divider, R_2, to the reciprocal of the amplifier gain setting and adjust amplifier offset bias for no deflection on the scope when S3 is switched between positions 1 and 2. Center scope tracing vertically. Set S3 to position 1. Record this voltage as $E_{O(\text{ref temp})}$.

3.8.3.3.7 Set environmental chamber temperature to specified extreme minimum temperature. Allow amplifier to "soak" at specified extreme minimum temperature for one-half hour then record oscilloscope deviation ΔE_O. Use a DVM for more accurate reading.

3.8.3.3.8 Calculate gain stability in percent as:

$$\Delta E_O = \left| E_{O(min\,Temp)} - E_{O(ref\ \ Temp)} \right| \tag{3-6}$$

$$Gain\ Stability\ Error\ (\%) = \frac{\Delta E_O}{E_{O(ref\ Temp)}} \bullet 100 \tag{3-7}$$

where ΔE_O is the deviation in volts from the reference temperature (23 ±3)°C to the extreme minimum temperature, and $E_{O(\text{ref Temp})}$ is the output voltage at the reference temperature (23 ±3)°C.

3.8.3.3.9 Repeat subparagraphs 3.8.3.3.7 and 3.8.3.3.8 for the specified maximum temperature.

3.9 Zero Stability with Temperature Test

3.9.1 Purpose. This test determines zero stability with temperature of the dc amplifier. Zero stability with temperature is defined as the change in output voltage with temperature. It is specified as the maximum allowable change in output voltage for referred to input (RTI) and referred to output (RTO) terms caused by temperature changes from (23 ±3)ºC to the low and high temperature extremes with the amplifier input leads terminated in the maximum source impedance and no input signal applied.

3.9.2 Test Equipment. Refer to paragraph 3.3.

3.9.3 Test Method.

3.9.3.1 Setup. Connect equipment as shown in Figure 3-8

3.9.3.2 Precautions. Refer to subparagraph 3.2.

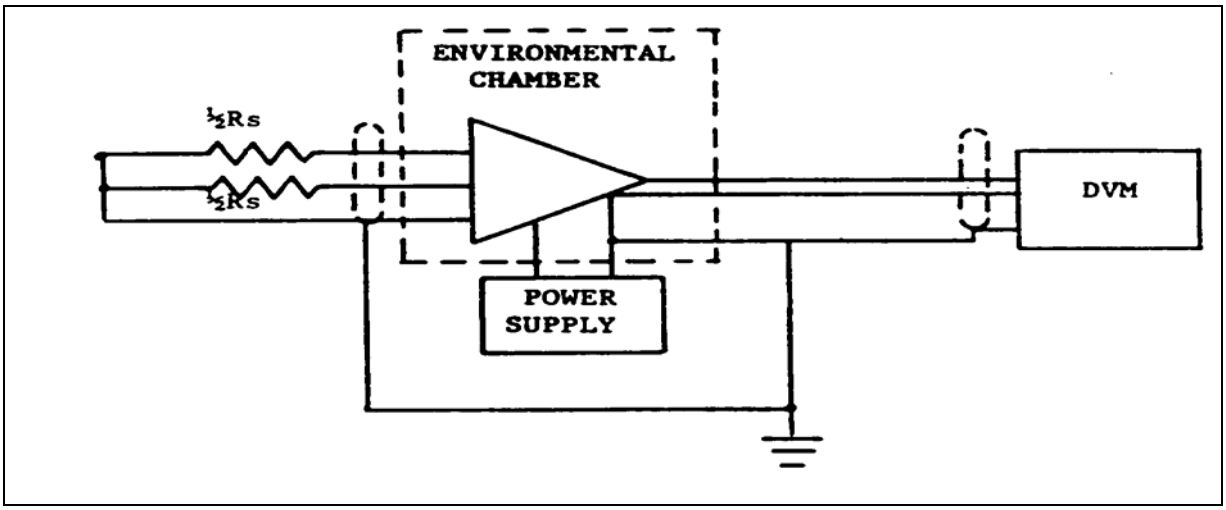

Figure 3-8. Block diagram for zero stability with temperature test.

3.9.3.3 Procedure.

3.9.3.3.1 Place amplifier in environmental chamber and set temperature to (23 ±3)ºC.

3.9.3.3.2 Set power supply to specified operating voltage, set gain to minimum, and verify that output voltage is approximately zero as measured on the digital voltmeter. The input resistors (½Rs) are selected to simulate an actual specified source impedance.

3.9.3.3.3 After temperature has stabilized at (23 ±3)ºC for one-half hour, record output voltage (E_O).

3.9.3.3.4 Obtain voltage output readings (E_O) for maximum and minimum specified temperature extremes after temperature has stabilized for one-half hour.

3.9.3.3.5 Using output voltage deviations from the (23 ±3)ºC reference, calculate stability (mV/ºC). The stability may or may not be linear over the temperature extremes; therefore, tests at additional temperatures should be made to verify linearity.

3.9.3.3.6 Repeat this test for a maximum gain value.

3.9.3.3.7 Plot measured stability versus gain for both maximum and minimum gain settings. If it can be assumed that the temperature stability versus gain relationship is linear, a line can be extended through the points to where temperature stability is determined for a gain of zero.

3.9.3.3.8 Temperature stability at a gain of zero is the stability output RTO. Express the relationship between stability RTI and total temperature stability as:

$$Stability_{RTI} = \frac{\sqrt{(Total\ \ Stability_{\max gain})^2 - (Stability_{RTO})^2}}{A_d} \qquad (3\text{-}8)$$

where A_d is the amplifier gain.

3.10 Frequency Response Test

3.10.1 Purpose. This test determines frequency response of the dc amplifier. Frequency response is defined as the minimum frequency range over which the amplifier gain is within ±3 dB of the dc level for all specified gains for any output signal amplitude within the linear output voltage range. Besides the 3-dB frequency response, instrumentation system amplifier specifications should include the 1 percent frequency response. The 1 percent frequency response is defined as the minimum frequency range over which the amplifier gain is within ±l percent of the dc level for all specified gains for any output signal amplitude within the linear output voltage range.

It is sometimes necessary to specify the amplifier roll off to attenuate high frequency noise or avoid adjacent channel interference. The frequency response should be expressed as "the amplifier gain shall be flat to within ±l percent, referred to dc, from dc to ____ Hz. The amplifier gain shall be attenuated a minimum of ____ dB [dB/Octave or dB/Decade] at all frequencies above ____ Hz referred to dc."

3.10.2 Test Equipment. Refer to paragraph 3.3.

3.10.3 Test Method.

3.10.3.1 Setup. Connect equipment as shown in Figure 3-9.

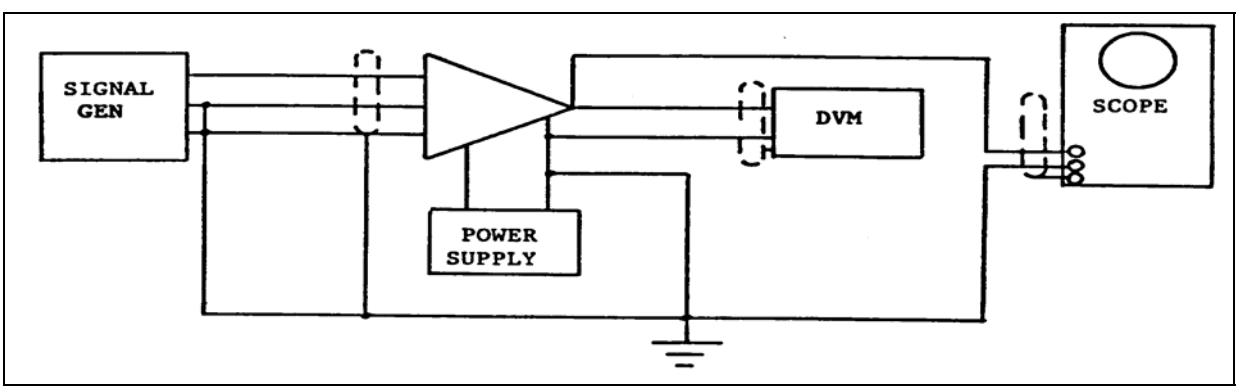

Figure 3-9. Block diagram for frequency response test.

3.10.3.2 Precautions. Refer to paragraph 3.2.

3.10.3.3 Procedure.

3.10.3.3.1 Set power supply to specified operating voltage, set amplifier gain to a mid-gain value, and adjust output voltage bias to approximately mid-range for zero input voltage.

3.10.3.3.2 Set signal generator for a sine wave signal with a frequency of 100 Hz or 1 percent of the amplifier maximum frequency response, whichever is lower. Adjust signal generator amplitude to produce a full-scale peak-to-peak output of the amplifier. Note input signal voltage and hold it constant throughout remainder of test.

3.10.3.3.3 Vary frequency of input signal over passband of amplifier while monitoring output voltage level.

3.10.3.3.4 Note frequency at which amplifier gain deviates 1 percent from gain value of original setup frequency; record this frequency as the 1 percent frequency response.

3.10.3.3.5 Note frequency at which amplifier gain is down 3 dB from value of amplifier dc gain; record this frequency as the 3-dB frequency response.

3.10.3.3.6 Repeat test with amplifier gain set to maximum and minimum values.

3.11 Slew Rate Test

3.11.1 Purpose. This test determines the slew rate of the dc amplifier. Slew rate is defined as the maximum rate at which the amplifier can change output voltage from the minimum to the maximum limit of linear output voltage range. It is specified as the maximum rate achieved (maximum slope) during the transition from the minimum to the maximum limit of linear output, expressed in volts per microsecond, with a large amplitude step voltage applied to the input of the amplifier and the amplifier driving a specified capacitive load. The slew rate is limited by capacitive loads and should always be specified for the load conditions expected. It should be noted that the specification for slew rate must be large enough to avoid the distortion and harmonic generation caused by slew rate limiting in the passband of the amplifier.

The equation for slew rate is the following:

$$\text{Slew rate (volts/mS)} > 2\pi fA \cdot 10^{-6} \qquad (3\text{-}9)$$

where:

f = maximum passband frequency (Hz)
A = linear output voltage (upper limit – lower limit) ÷ 2

3.11.2 Test Equipment. Refer to paragraph 3.3.

3.11.3 Test Method.

3.11.3.1 Setup. Connect equipment as shown in Figure 3-10.

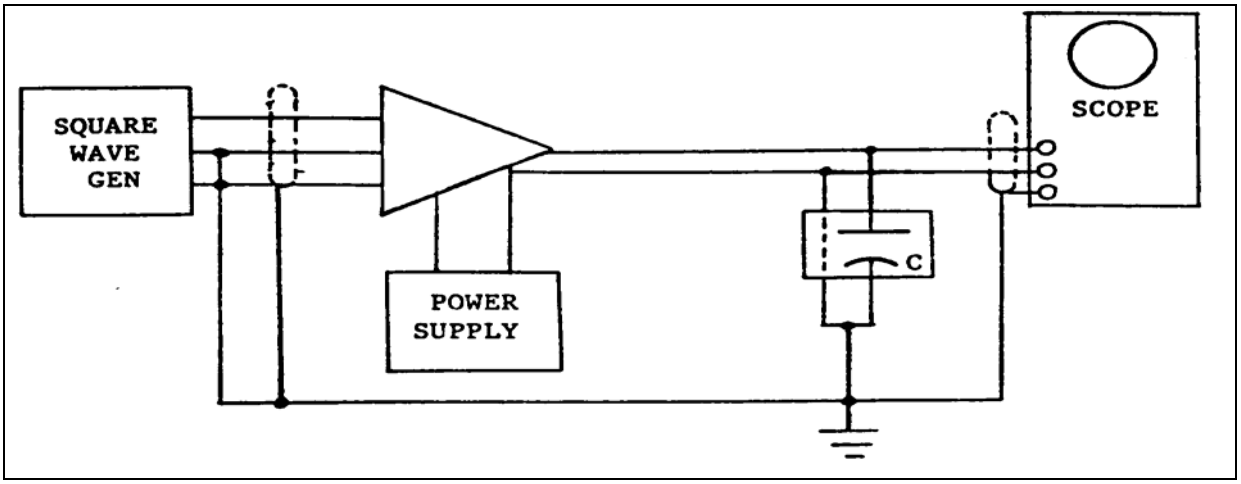

Figure 3-10. Block diagram for slew rate test.

3.11.3.2 Precautions. Refer to paragraph 3.2.

3.11.3.3 Procedure.

3.11.3.3.1 Use manufacturer's specified capacitive load (C).

3.11.3.3.2 Set power supply to specified operating voltage and adjust amplifier gain to a mid-gain value.

3.11.3.3.3 Set square wave generator to a frequency high enough to ensure that amplifier is in slew rate limiting, and adjust input voltage amplitude so amplifier output pulse rises and falls through entire specified span of amplifier output voltage as observed on the oscilloscope.

3.11.3.3.4 From oscilloscope trace, determine slope of the rising amplifier output when driving maximum specified load. The slew rate is recorded as the maximum slope in volts per microsecond.

3.11.3.3.5 Repeat this test for maximum and minimum gain settings.

3.12 Settling Time Test

3.12.1 Purpose. This test determines the settling time of the dc amplifier. Settling time is defined as the time following the application of a step voltage input for the amplifier output voltage to settle within a specified percentage of its final value. As defined, the settling time is a measure of the time for which the amplifier does not provide an accurate output following a rapid signal change. The step voltage input shall be of sufficient amplitude to drive the amplifier to its upper limit of linear output voltage. It is expressed as "____ microseconds to recover ±____ percent of final value."

3.12.2 Test Equipment. Refer to paragraph 3.3.

3.12.3 Test Method.

3.12.3.1 Setup. Connect equipment as shown in Figure 3-11.

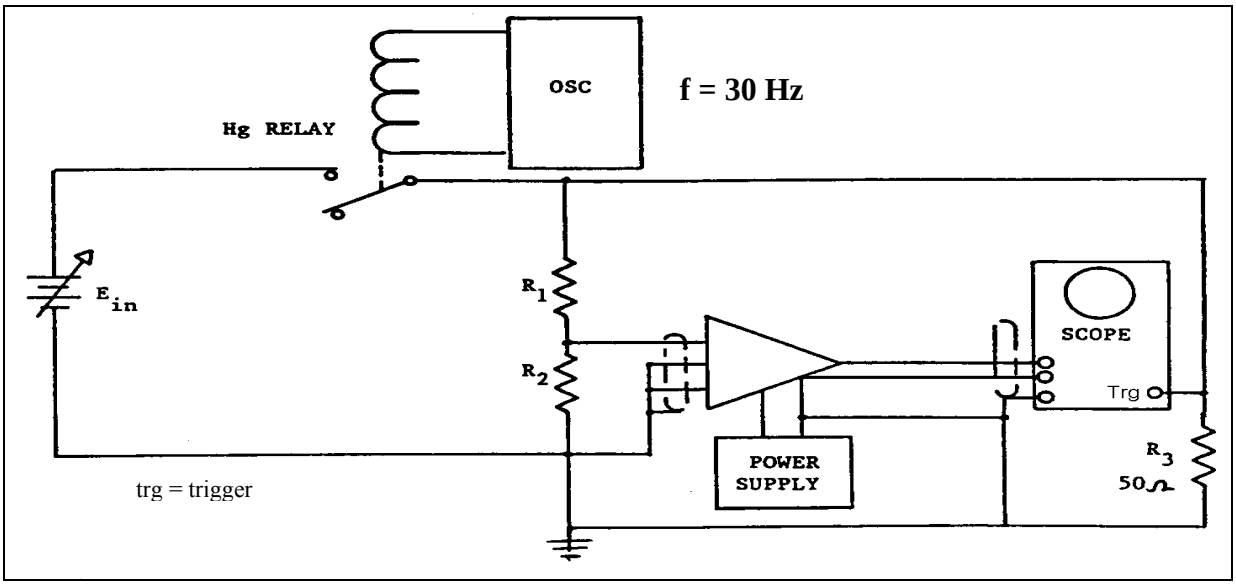

Figure 3-11. Block diagram for settling time test.

3.12.3.2 Precautions - Refer to paragraph 3.2.

3.12.3.3 Procedure.

3.12.3.3.1 Select E_{in} and the R_1, R_2 divider that will provide sufficient amplitude to drive amplifier to its upper limit of linear output voltage as observed on oscilloscope.

3.12.3.3.2 Set power supply to specified operating voltage and set amplifier gain to a mid-gain value.

3.12.3.3.3 Set frequency of signal generator driving mercury relay at a nominal 30 Hz. For a frequency less than 30 Hz, a storage scope should be used to capture the output response.

3.12.3.3.4 While the amplifier is being driven to its upper limit of linear output voltage, monitor amplifier output with oscilloscope to determine amount of time required for output to settle within the specified percentage of its final value. Record this time as the settling time.

3.12.3.3.5 Repeat this procedure for maximum and minimum gain settings.

3.13 Overload Recovery Test

3.13.1 Purpose. This test determines the overload recovery of the dc amplifier. Overload recovery is defined as the time required for the amplifier to recover from a specified differential input signal overload. It is specified as the maximum allowable number of microseconds from the end of the input overload to the time that the amplifier dc output voltage recovers to within the linear output voltage range. The input overload must be specified with respect to its amplitude, duration, and pulse shape. In those cases where the expected input overload is known and can be reasonably simulated on laboratory instruments, it should be specified as the overload condition. If the expected overload is not known, a pulse voltage with a duration within the response of the amplifier shall be employed. Overload recovery shall be expressed as "____ microseconds, maximum, for output voltage recovery to within the linear output voltage range for a step voltage input of __ percent overload and __ milliseconds overload duration at an amplifier gain of __."

3.13.2 Test Equipment. Refer to paragraph 3.3.

3.13.3 Test Method.

3.13.3.1 Setup. Connect equipment as shown in Figure 3.12.

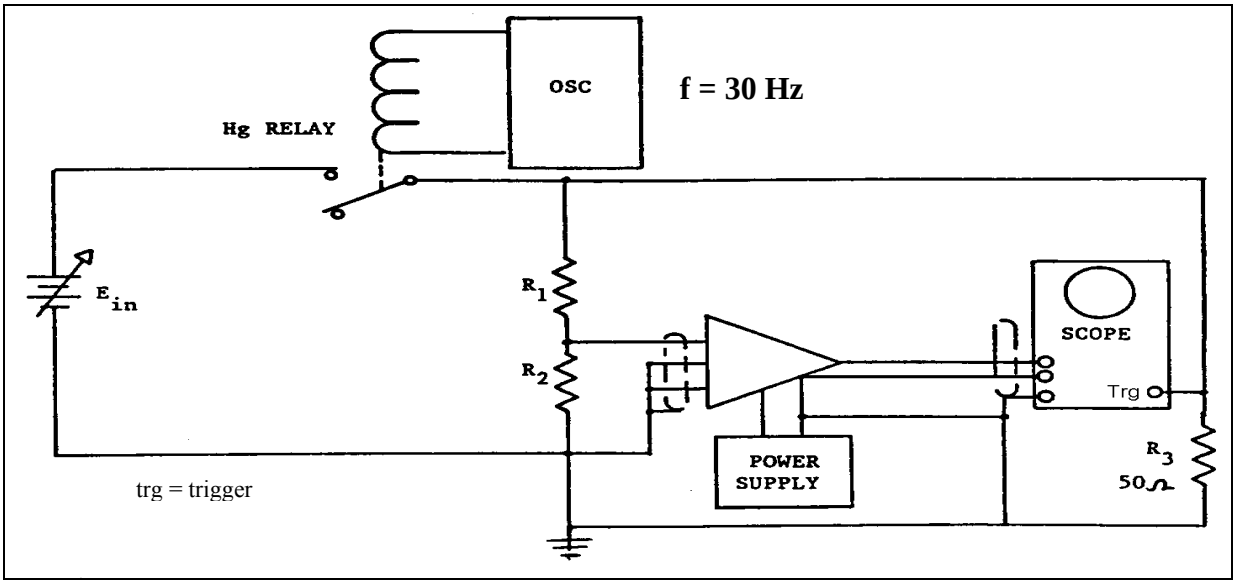

Figure 3-12. Block diagram for overload recovery test.

3.13.3.2 Precautions. Refer to paragraph 3.2.

3.13.3.3 Procedure.

3.13.3.3.1 Select E_{in} and the R_1, R_2 divider that will provide specified differential input signal overload.

3.13.3.3.2 Set power supply to specified operating voltage without current limiting and set amplifier gain to a mid-gain value.

NOTE

It is important that the oscilloscope operating manual be consulted to ensure that the overload recovery limits of the oscilloscope are not exceeded during this test.

3.13.3.3.3 Trigger oscilloscope from trailing edge of E_{in} as illustrated in Figure 3-12.

3.13.3.3.4 Set signal oscillator frequency to obtain an overload pulse duration at amplifier input.

3.13.3.3.5 Adjust oscilloscope gain (without exceeding overload recovery limits) and time base to measure the time from the end of the input overload to the time that the amplifier recovers within the linear output voltage range. Record this time as the overload recovery time.

3.13.3.3.6 Repeat this procedure for maximum and minimum gain settings.

3.14 Noise Test

3.14.1 Purpose. This test determines the noise of the dc amplifier. Noise is divided into two components: RTI and RTO. The noise RTI is defined as that component of noise that varies directly with gain and is measured with the amplifier input leads terminated in the maximum source impedance and no input signal applied. The noise RTO is defined as that component of noise that remains fixed with gain. Noise is normally specified as an rms value, but for chopper stabilized amplifiers the specification should contain a peak-to-peak noise value. The noise is expressed as "a maximum of ____ microvolts rms, RTI and ____ microvolts rms, RTO."

3.14.2 Test Equipment. Refer to paragraph 3.3.

3.14.3 Test Method.

3.14.3.1 Setup. Connect equipment as shown in Figure 3-13.

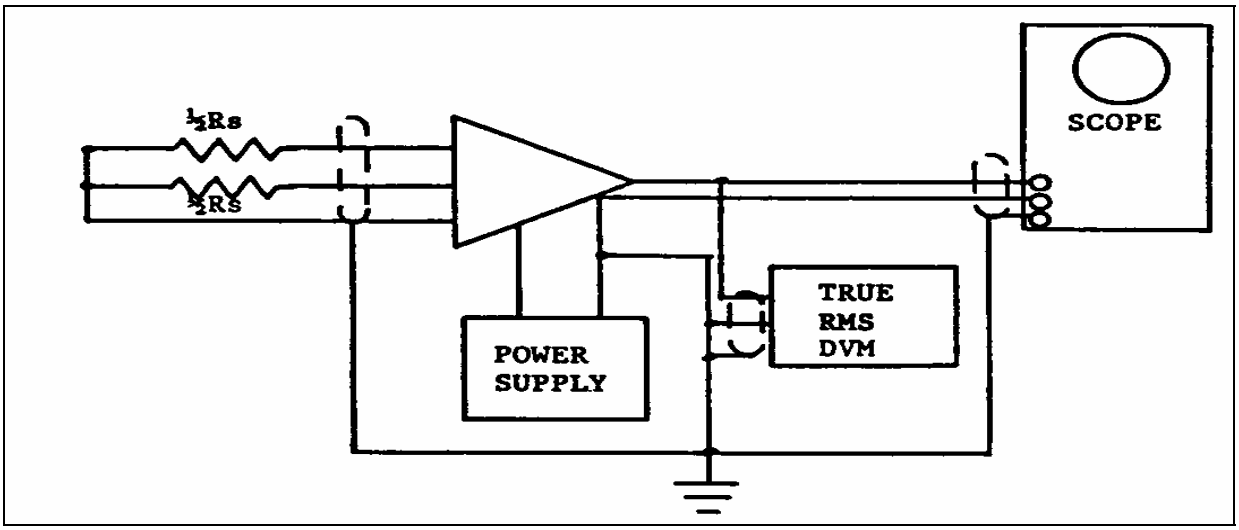

Figure 3-13. Block diagram for noise test.

3.14.3.2 Precautions. Refer to paragraph 3.2.

3.14.3.3 Procedure.

3.14.3.3.1 Connect equipment as shown in Figure 3-13. The ground referenced input resistors, ½Rs (which may be specified as balanced or unbalanced), simulate the source impedance in the amplifier specification.

3.14.3.3.2 Set power supply to specified operating voltage and verify that amplifier output voltage is approximately midrange for zero input voltage as observed on oscilloscope or DVM.

3.14.3.3.3 Turn amplifier gain to its minimum value, then measure and record noise level at amplifier output as displayed on oscilloscope or DVM.

3.14.3.3.4 Turn amplifier gain to its maximum value, then measure and record noise level at amplifier output as displayed on oscilloscope (peak-to-peak) or DVM (rms).

3.14.3.3.5 Plot measured noise versus gain for both maximum and minimum gain settings. If it can be assumed that the noise versus gain relationship is linear, a straight line can be extended through the points to where the noise level is determined for a gain of zero. The noise level at a gain of zero is then the noise referred to output (RTO).

3.14.3.3.6 Express the relationship between RTO, referred to input (RTI), and total noise as:

$$E_{n(RTI)} = \frac{\sqrt{(En_{max\ gain})^2 - (En_{(RTO)})^2}}{A_d} \qquad (3\text{-}10)$$

where A_d is amplifier gain.

3.15 Harmonic Distortion Test

3.15.1 Purpose. This test determines the harmonic distortion of the dc amplifier. Harmonic distortion is defined as the maximum harmonic content for any amplifier frequency or output amplitude within the specified limits. It is specified as the rms value of the harmonic content of the output signal as a percentage of the rms value of the total output signal.

3.15.2 Test Equipment. Refer to paragraph 3.3.

3.15.3 Test Method.

3.15.3.1 Setup. Connect equipment as shown in Figure 3-14.

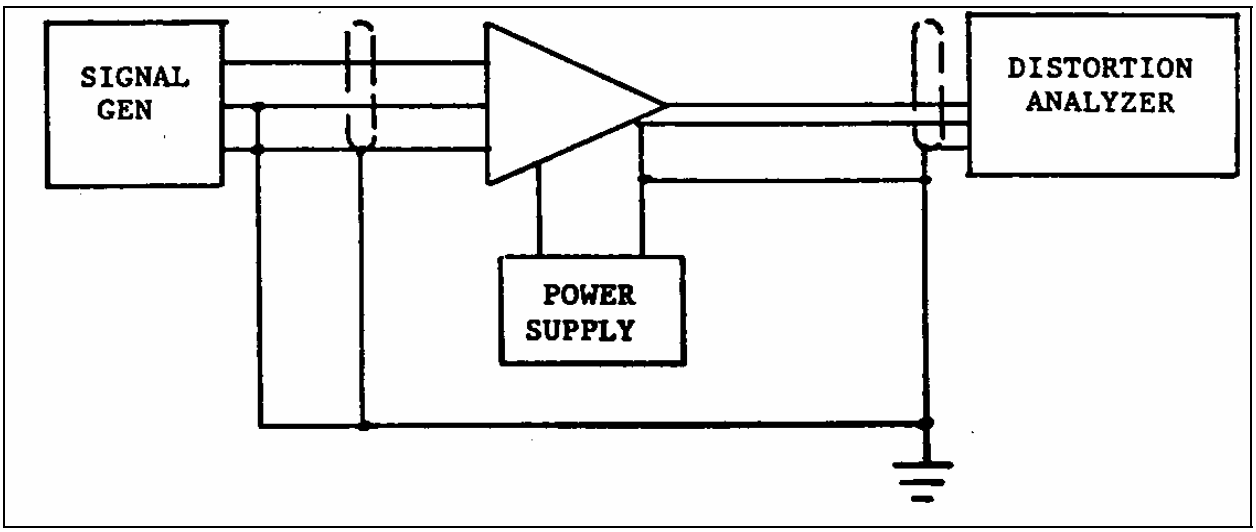

Figure 3-14 Block diagram for harmonic distortion test.

3.15.3.2 Precautions. Refer to paragraph 3.2.

3.15.3.3 Procedure.

3.15.3.3.1 Set power supply to specified operating voltage and set amplifier gain to a mid-gain value.

3.15.3.3.2 Make preliminary distortion tests to make certain that signal source is free of harmonic distortion.

3.15.3.3.3 Use distortion analyzer to measure total harmonic distortion of amplifier output signal as input signal is varied over fundamental frequencies of the amplifier passband.

3.15.3.3.4 Repeat tests for maximum and minimum gain settings.

3.16 Output Impedance Test

3.16.1 Purpose. This test determines the output impedance of the dc amplifier. Output impedance is defined as the internal impedance in series with the amplifier output represented by Z_O in Figure 3-1. It is specified as the maximum impedance that the amplifier will present when it is operated anywhere within its specification.

3.16.2 Test Equipment. Refer to paragraph 3.3.

3.16.3 Test Method.

3.16.3.1 Setup. Connect equipment as shown in Figure 3-15.

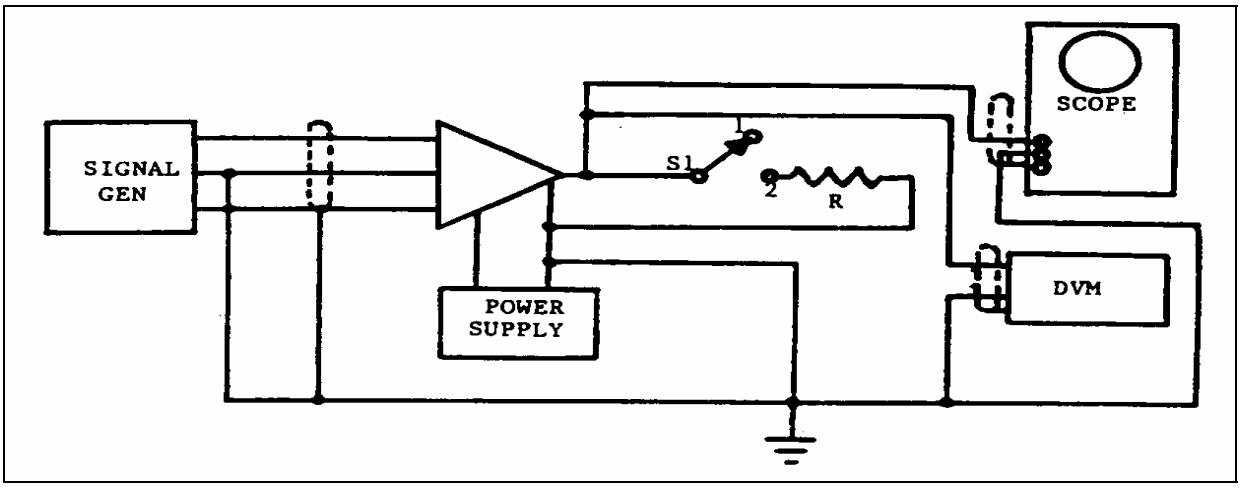

Figure 3-15. Block diagram for output impedance test.

3.16.3.2 Precautions. Refer to paragraph 3.2.

3.16.3.3 Procedure.

3.16.3.3.1 Select a value of R approximately 1000 times the expected output impedance. A lower value of R may be used provided the maximum rated output current is not exceeded.

3.16.3.3.2 Set power supply to specified operating voltage, set amplifier gain to a mid-gain value, and observe that amplifier output voltage is approximately mid-range for a zero input voltage.

3.16.3.3.3 Adjust signal generator for a 100-Hz sine wave signal to obtain 1 V rms at amplifier output with switch in position 1.

3.16.3.3.4 Verify that output is free of distortion as displayed on oscilloscope and record DVM reading as 1 volt.

3.16.3.3.5 Place switch in position 2, again observing that output signal is free of distortion. Record DVM reading, E_O.

3.16.3.3.6 Calculate output impedance by:

$$Z_{\mathrm{O}} = R\left(\frac{1}{E_{\mathrm{O}}} - 1\right) \tag{3-11}$$

3.16.3.3.7 Vary signal frequency over specified passband of amplifier and record change in output impedance.

CHAPTER 4

POWER SUPPLIES

4.1 General

The following tests evaluate the performance characteristics of dc output instrumentation power supplies. Both ac and dc input supplies are considered. The tests are structured so that the data obtained are comparable to the manufacturers' specifications where applicable. In some cases, more than one test procedure is required to cover the variance of parameter specifications.

4.2 Line Regulation Test

4.2.1 Purpose. This test measures the change in steady state dc output voltage resulting from an input voltage change over the specified range.

4.2.2 Test Equipment.

4.2.2.1 A digital or differential voltmeter with resolution and accuracy of at least an order of magnitude better than the expected measurement value.

4.2.2.2 A variable ac supply with adequate voltage and current capability to operate the power supply under test.

4.2.2.3 A variable dc supply (dc to dc supplies) with adequate voltage and current capability to operate the power supply under test.

4.2.2.4 A resistive load with adequate power rating to handle the full load output of the power supply under test.

4.2.3 Test Method.

4.2.3.1 Setup. Connect test equipment as shown in Figure 4-1.

4.2.3.2 Conditions. The supply shall be operating at nominal output voltage and nominal output current.

4.2.3.3 Procedure.

4.2.3.3.1 Adjust the input voltage to the nominal specified value. Record steady state output voltage, E_{out} nominal.

4.2.3.3.2 Adjust the input voltage source for the minimum specified value. Record steady state output voltage, E_1.

4.2.3.3.3 Readjust the input voltage source for the maximum specified value. Record steady state output voltage, E_2.

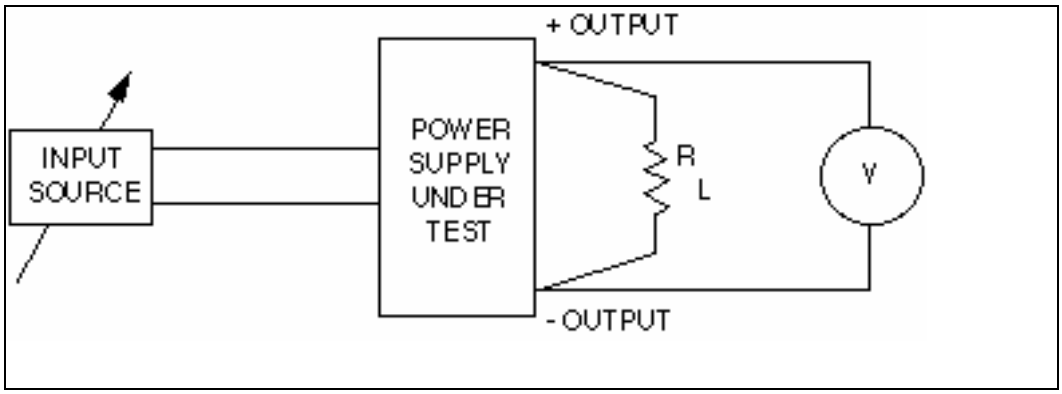

Figure 4-1. Line regulation test setup.

4.2.4 Data Reduction. Calculate line regulation using

$$\text{Percent Regulation} = \frac{E_2 - E_1}{E_{out}\ \text{nominal}} \bullet 100 \qquad (4\text{-}1)$$

NOTE

This calculation yields the total percentage output deviation over the specified input range.

4.3 Load Regulation Test

4.3.1 Purpose. This test determines the change in steady-state dc output voltage resulting from a full-range load change.

4.3.2 Test Equipment.

4.3.2.1 A digital or differential voltmeter with resolution and accuracy of at least an order of magnitude better than the expected measurement value.

4.3.2.2 A dc ammeter with resolution and accuracy of at least an order of magnitude better than the expected measurement value.

4.3.2.3 A variable resistive load with adequate power rating to handle the full load output of the power supply under test.

4.3.3 Test Method.

4.3.3.1 Setup.

4.3.3.1.1 Connect test equipment as shown in Figure 4-2.

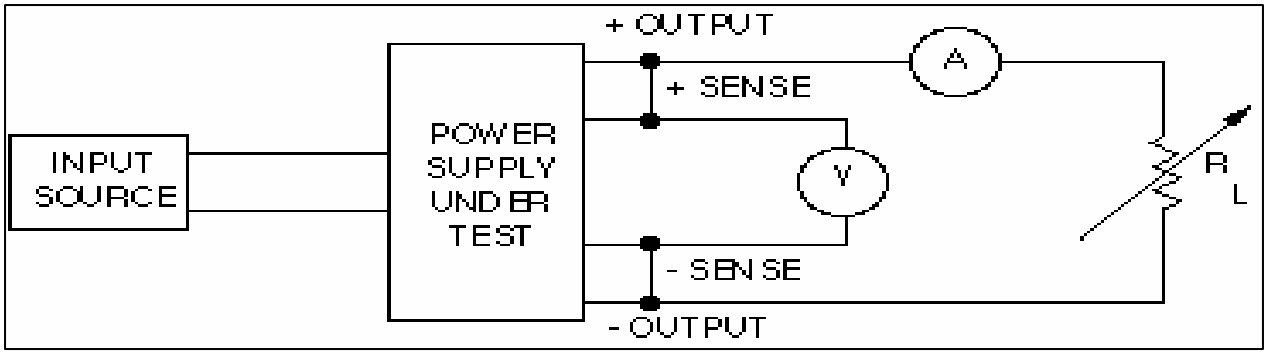

Figure 4-2. Load regulation test set-up.

4.3.3.1.2 Use separate leads (twisted pairs or shielded cable) for the voltmeter.

4.3.3.1.3 Connect the load to the output terminals and, if available, use the sense terminals for the digital voltmeter. If sense terminals are not available, make the connection for the voltmeter at the power supply terminals. DO NOT USE CLIP LEADS FOR VOLTMETER.

4.3.3.2 Conditions. The supply is to be operated at its nominal input voltage.

4.3.3.2.1 Procedure.

4.3.3.2.1.1 Adjust the load so that the output current is set to a value in the middle of the operating range. Record the steady state

output voltage, E_{out} nominal.

4.3.3.2.1.2 Adjust the load so that the output current is set to the minimum value specified. Record steady state

output voltage, E_l.

4.3.3.2.1.3 Adjust the load so that the output current is set to the maximum value specified. Record steady state

output voltage, E_2.

4.3.4 Data Reduction. Calculate load regulation using

$$\text{Percent Regulation} = \frac{E_2 - E_1}{E_{out}\ \text{nominal}} \bullet 100 \qquad (4\text{-}2)$$

NOTE This calculation yields the total percentage output deviation over the specified load range.

4.4 Efficiency Test

4.4.1 Purpose. This test determines operating efficiency, that is, the ratio of the output power to the input power.

4.4.2 Test Equipment.

4.4.2.1 Test 1: dc-to-dc Supplies.

4.4.2.1.1 Two dc voltmeters with resolution and accuracy of at least an order of magnitude better than the expected measurement value.

4.4.2.1.2 Two dc ammeters with resolution and accuracy of at least an order of magnitude better than the expected measurement value.

4.4.2.1.3 A resistive load with adequate power rating to handle the full load output of the power supply under test.

4.4.2.2 Test 2: ac-to-dc Supplies.

4.4.2.2.1 A dc voltmeter with resolution and accuracy of at least an order of magnitude better than the expected measurement value.

4.4.2.2.2 A dc ammeter with resolution and accuracy of at least an order of magnitude better than the expected measurement value.

4.4.2.2.3 A true rms voltmeter with resolution and accuracy of at least an order of magnitude better than the expected measurement value, and a crest factor of at least 10:1.

4.4.2.2.4 A phase angle voltmeter.

4.4.2.2.5 A current probe and amplifier with frequency and current ranges compatible with the input requirements and with a voltage output compatible with the phase angle voltmeter.

4.4.2.2.6 A resistive load with adequate power rating to handle the full load output of the power supply under test.

4.4.3 Test Method.

4.4.3.1 dc-to-dc Supplies.

4.4.3.1.1 Setup. Connect equipment as shown in Figure 4-3.

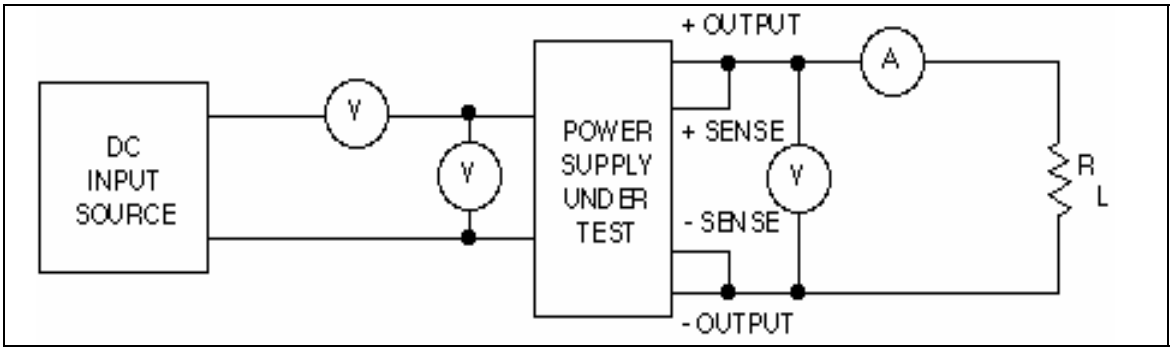

Figure 4-3. Efficiency test setup: dc-to-dc supplies.

4.4.3.1.2 Conditions. The power supply should be operating at nominal input voltage and full-rated output.

4.4.3.1.3 Procedure. Record E_{in}, I_{in}, E_{out}, I_{out}.

4.3.3.1.4 Data Reduction. Calculate efficiency using the following formula:

$$\text{Percent Efficiency} = \frac{E_{out}\ I_{out}}{E_{in}\ I_{in}} \bullet 100 \qquad (4\text{-}3)$$

4.4.3.2 ac-to-dc Supplies.

4.4.3.2.1 Setup. Connect equipment as shown in Figure 4-4.

4.4.3.2.2 Conditions. The power supply should be operating at nominal input voltage and full rated output.

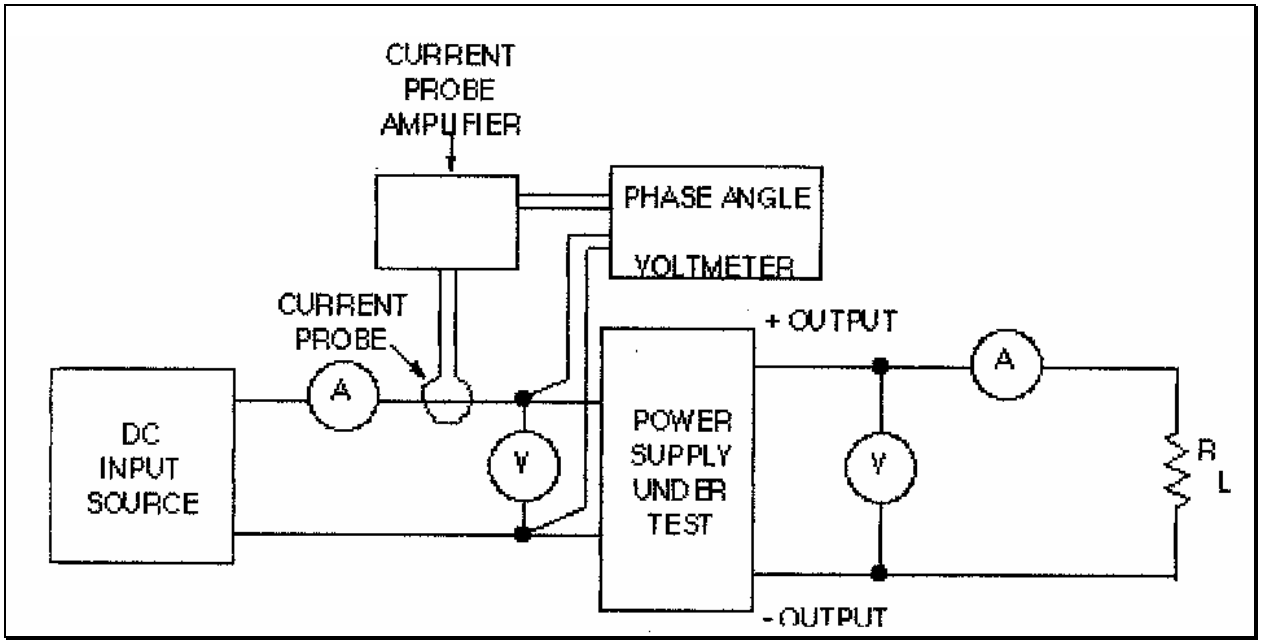

Figure 4-4. Efficiency test setup - ac-to-dc supplies.

4.4.3.2.3 Procedure. Record I_{out}, E_{out}, I_{in}, E_{in}, φ (E_{in} to I_{in} phase angle).

4.4.3.2.4 Data Reduction. Calculate the efficiency

$$\text{Percent Efficiency} = \frac{E_{out} I_{out}}{E_{in} I_{in} \cos\phi} \bullet 100 \qquad (4\text{-}4)$$

4.5 Load Transient Recovery Test

4.5.1 Purpose. This test measures the time required for the output dc voltage to recover and stay within a specified band following a step change in load.

4.5.2 Test Equipment.

4.5.2.1 An oscilloscope or transient data recorder with a bandwidth of 100 kHz or greater.

4.5.2.2 A load switching circuit.

Maximum load rating.

4.5.2.3 A resistive load with adequate power rating to handle the full load output of the power supply under test.

4.5.3 Test Method.

4.5.3.1 Setup.

4.4.3.1.1 Connect equipment as shown in Figure 4-5.

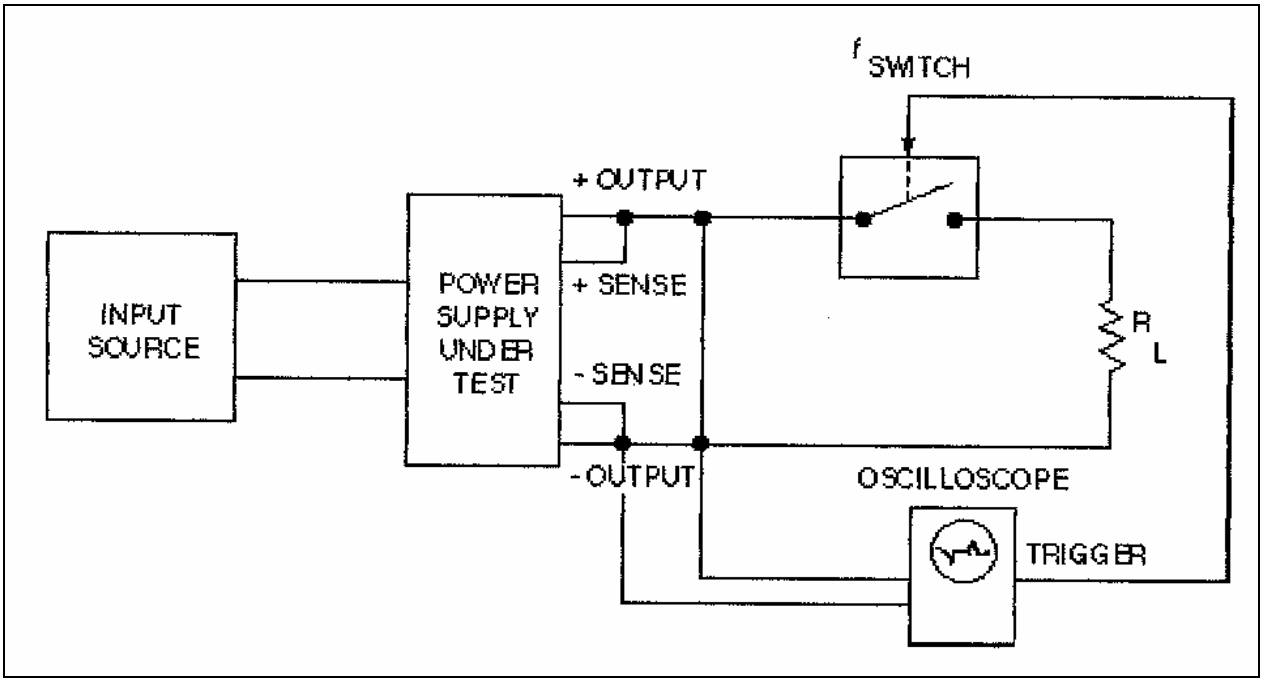

Figure 4-5. Load transient recovery test setup.

4.5.3.1.2 Load switching should be accomplished using an electronically controlled switching circuit if a transient data recorder is not used.

4.5.3.2 Conditions. The supply should be operated at nominal input voltage and at 90 percent of full-rated output.

4.5.3.3 Procedures.

4.5.3.3.1 Ensure that the period of the switching signal is greater than the transient recovery time of the power supply output voltage.

4.5.3.3.2 Activate the load switching circuit and synchronize the oscilloscope (if not using a transient data recorder) with the switching rate.

4.5.3.3.3 Observe the waveform and record the time necessary for the dc output voltage to return and stay within the specified error band (see Figure 4-6).

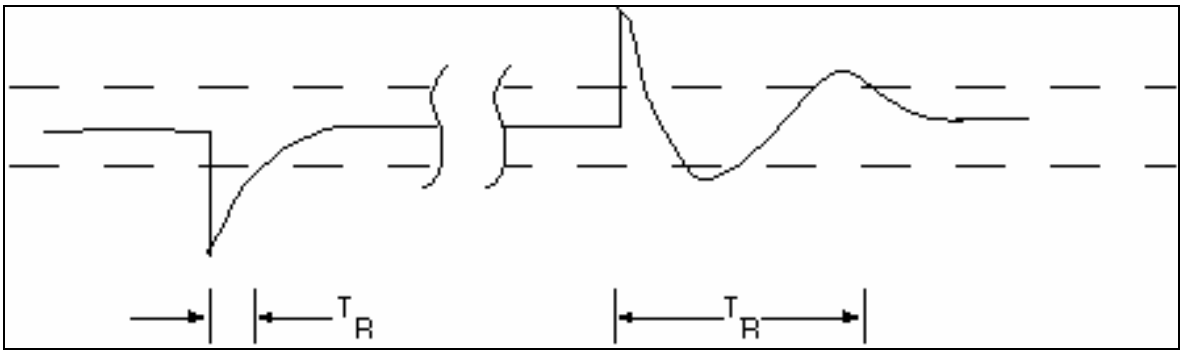

Figure 4-6. Load transient recovery waveform.

4.5.4 Data Reduction. The time (T_R) observed on the oscilloscope is the recovery time.

4.6 Stability (Drift) Test

4.6.1 Purpose. This test measures the drift (periodic and random deviations) over a bandwidth from dc to an upper limit that coincides with the lower limit for the Periodic and Random Deviation (PARD) test, paragraph 4.7.

4.6.2 Test Equipment.

4.6.2.1 A nulling digital or differential voltmeter with recording output whose stability over an 8-hour interval is of at least an order of magnitude better than the power supply under test and whose accuracy and resolution are of at least an order of magnitude better than the expected measurement value.

4.6.2.2 A resistive load with adequate power rating to handle the full-load output of the power supply under test.

4.6.3 Test Method.

4.6.3.1 Setup. Connect equipment as shown in Figure 4-7.

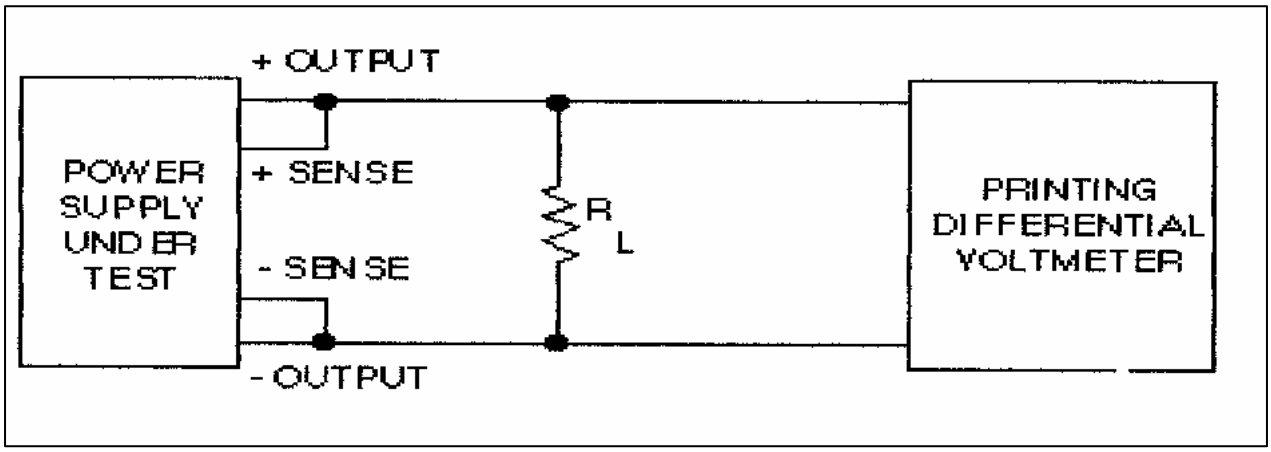

Figure 4-7. Stability test set-up.

4.6.3.2 Conditions. All power supply parameters must be held constant over this 8-hour test. Although this test may be performed at any condition within specifications, the entire test setup should be placed in a controlled environment.

4.6.3.3 Procedures.

4.6.3.3.1 Turn the power supply on and adjust the output to the desired level (nominal output voltage).

4.6.3.3.2 Adjust the output of the voltmeter so that the value displayed is at null.

4.6.3.3.3 Activate the voltmeter printer at an appropriate rate to display data for 8 hours.

4.6.4 Data Reduction. After 8 hours, observe maximum peak-to-peak deviation recorded. Calculate the drift using:

$$\text{Percent Drift} = \frac{\text{Peak - to - peak deviation}}{\text{Nominal output voltage}} \bullet 100 \qquad (4\text{-}5)$$

4.7 Periodic and Random Deviation (PARD) Test

4.7.1 Purpose. This test measures PARD (ac ripple and noise) of the dc output voltage over a specified bandwidth with all other parameters held constant. Fluctuations below the lower frequency limit are considered to be drift.

4.7.2 Test Equipment.

4.7.2.1 A differential oscilloscope or digital transient recorder with a bandwidth adequate to perform noise measurement (approximately 20 Hz to 20 MHz) and an ac coupling (lower frequency limit coincident with that for the noise).

4.7.2.2 A true rms voltmeter with resolution and accuracy of at least an order of magnitude better than the expected value and a crest factor of at least 10:1.

4.7.2.3 A resistive load with adequate power rating to handle the full-load output of the power supply under test.

4.7.3 Test Method.

4.7.3.1 Setup.

4.7.3.1.1 Connect equipment as shown in Figure 4-8. The length of test leads outside the shield must be kept as short as possible.

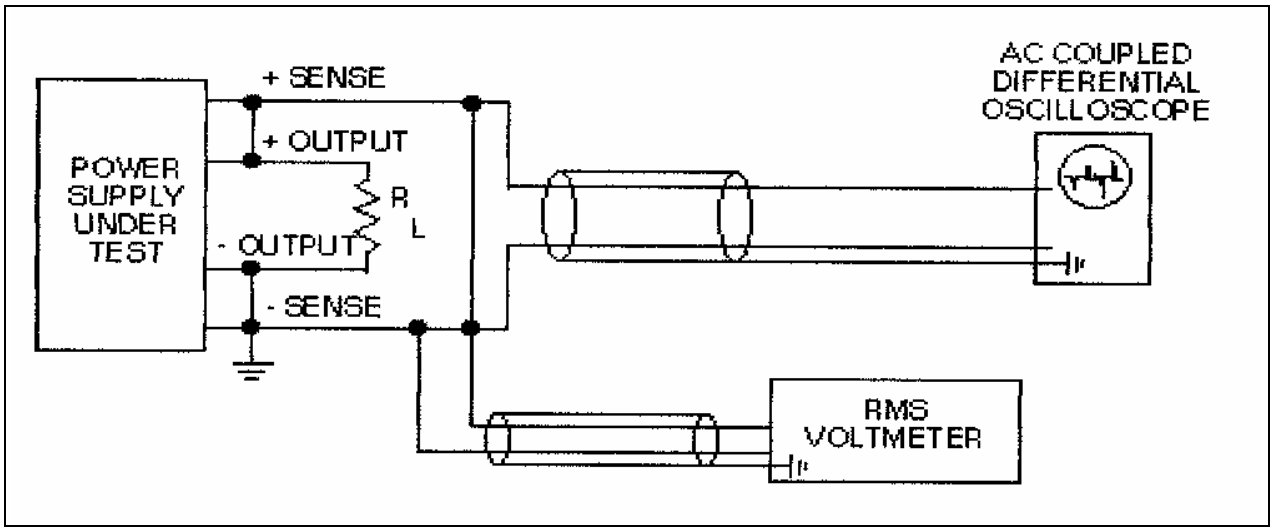

Figure 4-8. Periodic and random deviation test setup.

4.7.3.1.2 The oscilloscope or digital transient recorder should be ac coupled and the lower frequency limit should be the same as that specified for the power supply ripple and noise.

4.7.3.2 Conditions. The power supply should be operated at the nominal input voltage and at the full-rated output.

4.7.3.3 Procedures.

4.7.3.3.1 To verify that the test setup is free from extraneous signals, turn off the power supply. With the leads connected across the sense terminals (or output terminals if no sense terminals are available), there should be no signal present on the oscilloscope.

4.7.3.3.2 Turn on the power supply and apply the full-rated load.

4.7.3.3.3 Observe the waveform on the oscilloscope and record the maximum peak-to-peak excursions of the trace.

4.7.3.3.4 Record the true rms value of the ripple and noise.

4.7.4 Data Reduction. Readings recorded in subparagraph 4.7.3.3.3 are the peak-to-peak ripple and noise, and the readings recorded in subparagraph 4.7.3.3.4 are true rms ripple and noise.

4.8 Temperature Coefficient Test

4.8.1 Purpose. This test measures change in output voltage per degree Celsius change in ambient temperature.

4.8.2 Test Equipment.

4.8.2.1 A digital or differential voltmeter with resolution and accuracy at least an order of magnitude better than the expected measurement value.

4.8.2.2 A temperature chamber with size and temperature limits compatible with the power supply specification.

4.8.2.3 A resistive load with adequate power rating to handle the full-load output of the power supply under test.

4.8.3 Test Method.

4.8.3.1 Setup. Connect equipment as shown in Figure 4-9 with the power supply inside the chamber and the measuring instrument outside.

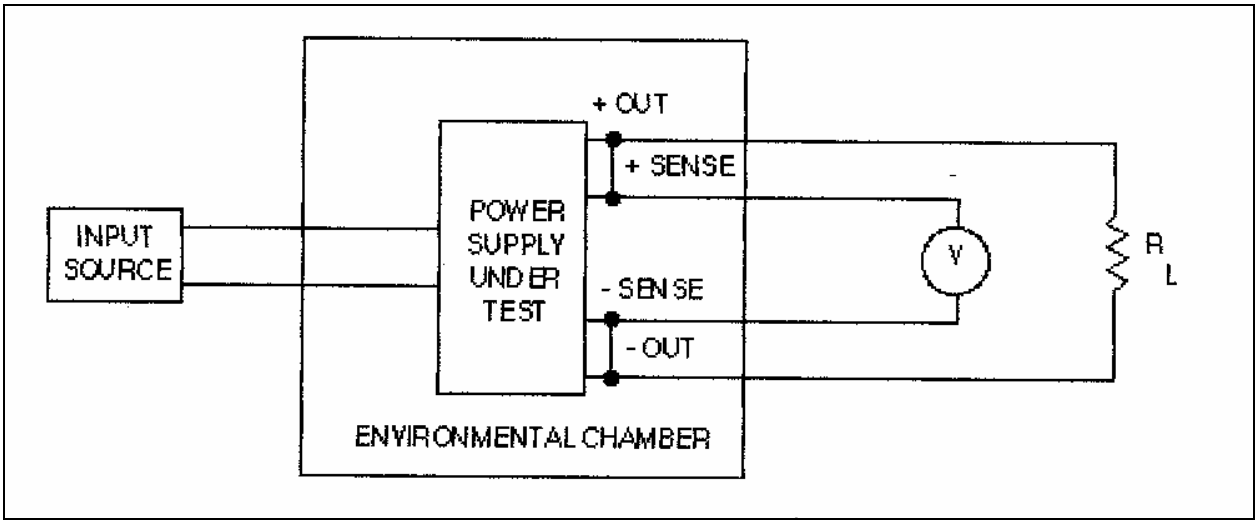

Figure 4-9. Temperature coefficient test setup.

4.8.3.2 Conditions. Perform this test in the laboratory at the nominal or mid-range operating temperature. Input voltage, load resistance, and output setting are to be held constant.

4.8.3.3 Procedures.

4.8.3.3.1 Record the nominal output voltage and temperature.

4.8.3.3.2 After changing the temperature of the chamber, it is necessary to allow the power supply to thermally stabilize for a sufficient period of time.

4.8.3.3.3 For each temperature setting, record the temperature and dc output voltage.

4.8.4 Data Reduction. Plot the data obtained as:

Abscissa: temperature

$$\text{Ordinate: Percent voltage change} = \frac{E_{out} - E_{out}\ \text{nominal}}{E_{out}\ \text{nominal}} \bullet 100 \qquad (4\text{-}6)$$

If the resultant plot is linear, the temperature coefficient (TC) is determined by recording the peak-to-peak percentage voltage change as shown on the plot and calculating:

$$TC = \frac{\text{Peak - to - peak percentage voltage change}}{\text{Max. temp.} - \text{Min. temp.}} \qquad (4\text{-}7)$$

The units of TC are %/°C. If the relationship is nonlinear, the results are best presented graphically.

CHAPTER 5

TEST PROCEDURES FOR TELEMETRY TRANSMITTERS

5.1 General

This chapter provides the user with a set of test procedures to determine the performance characteristics of telemetry transmitters that are designed to conform to IRIG Document 106, *Telemetry Standards.* It may not be necessary to conduct all of the tests described in this chapter. Off-the-shelf transmitters used in most telemetry systems may only require the following tests using the specified radio frequency (RF) output termination: ac or dc modulation linearity, modulation sensitivity, modulation frequency response, spurious emissions (an antenna conducted spurious and harmonic output test using a spectrum analyzer), and testing during temperature and power variations. Refer to paragraphs 5.5, 5.6, 5.8, 5.9, 5.10, and 5.13 for details.

NOTE

Test environments are not specified. Testing should be conducted in/at intended operational environments.

NOTE

Tunable transmitters may require testing at several frequencies in their band of operation. Ensure that additional testing is done at various operating frequencies including high and low frequencies to yield a satisfactory level of confidence that all requirements are met for the intended frequencies of operation.

5.1.1 Test Equipment. Table 5-1 contains a complete list of test equipment for all tests in Chapter 5. (See the setup subparagraph for each test.) The test receiver should be calibrated in accordance with IRIG-118, Volume 2, Chapter 4. Test equipment should be calibrated and equipment accuracy should be taken into account.

TABLE 5-1. TEST EQUIPMENT REQUIRED FOR CHAPTER 5 TESTS			
Quantity	Description	Quantity	Description
2	Function generators	1	Wave analyzer
1	Precision dc power supply	1	Camera (optional)
2	Digital voltmeter	1	50-ohm RF load
2	Attenuators	2	rms voltmeters
1	Voltage divider	2	dc power supplies
1	Ohmmeter	1	Ammeter
1	Crystal detector	4	Directional couplers
1	Constant impedance adjustable line	2	Variable attenuators
1	Isolator	1	Strip chart recorder
2	impedance transformers (voltage standing wave ratio (VSWR 1.5:1 & VSWR 3:1)	1	RF spectrum analyzer (with 1,3 and 10 kHz resolution bandwidth)
1	Test receiver		
1	Oscilloscope	1	Variable resistor*
1	Pseudo-random pattern (PN) generator	1	Resistor for terminating modulation input
1	Electronic counter	1	Power meter (RF)
1	Digital-to-analog converter	1	Heat sink with controller
1	Variable capacitor*	1	RF signal generator (AM and FM)
1	Plotter		

*For modulation input impedance test, values are determined by the transmitter to be tested.

5.2 Load Mismatch Test

NOTE The load mismatch test shall be the first test conducted.

5.2.1 Purpose. Typically, antennas will not be perfectly matched to the transmitter output impedance. In a mismatch condition, the transmitter may oscillate causing unwanted harmonics at its output or fail to meet the minimum specified output power for a required mismatch condition. This test measures the effect of load mismatch on RF power, center frequency, incidental frequency modulation, and spurious emissions. The test also determines the adjustable line setting to be used in the remainder of the tests. For most routine acceptance tests, the specified RF output termination can be used for the remainder of the tests.

5.2.2 Test Equipment. See paragraph 5.1.1.

5.2.3 Test Method.

5.2.3.1 Setup. Connect test equipment as shown on Figure 5-1. The transmitter shall be mounted on a heat sink with thermal conducting compound.

5.2.3.2 Conditions. These test conditions are typical. If transmitter detail specifications differ from these values, appropriate changes shall be made.

Temperature:	Room ambient (25 ±3)˚C
Altitude:	Room ambient
Vibration:	None
Humidity:	Room ambient up to 90 percent relative humidity
Primary power:	As specified in the detail specification
Warm-up time:	As specified in the detail specification
Modulation input termination:	An impedance equal to the modulation input impedance, which is connected across the modulation input terminals.
RF output termination:	A coaxial load with a power rating adequate for the transmitter under test, with a voltage standing wave ratio (VSWR) of 1.5 to 1 with respect to 50 ohms and with a reflection coefficient phase angle adjusted to minimize RF output power.

5.2.3.3 Procedure.

5.2.3.3.1 Measure transmitter output power while adjusting the adjustable line through at least one-half wavelength. Record the minimum power, the worst-case center frequency shift, maximum incidental frequency modulation (FM), and spurious emissions measured on Data Sheet 5.2.1.

5.2.3.3.2 Remove the 75 to 50 ohm impedance transformer and substitute a 150 to 50 ohm impedance transformer (transmitter load VSWR of 3.0 to 1.0) in its place. Repeat sub-paragraph 5.2.3.3.1.

5.2.3.3.3 Remove the 150 to 50 ohm impedance transformer and substitute a 75 to 50 ohm impedance transformer in its place. Repeat subparagraph 5.2.3.3.1.

5.2.3.3.4 Adjust the phase shifter for minimum transmitter output power and mechanically lock in this position. Do not readjust the adjustable line until tests are completed on this transmitter.

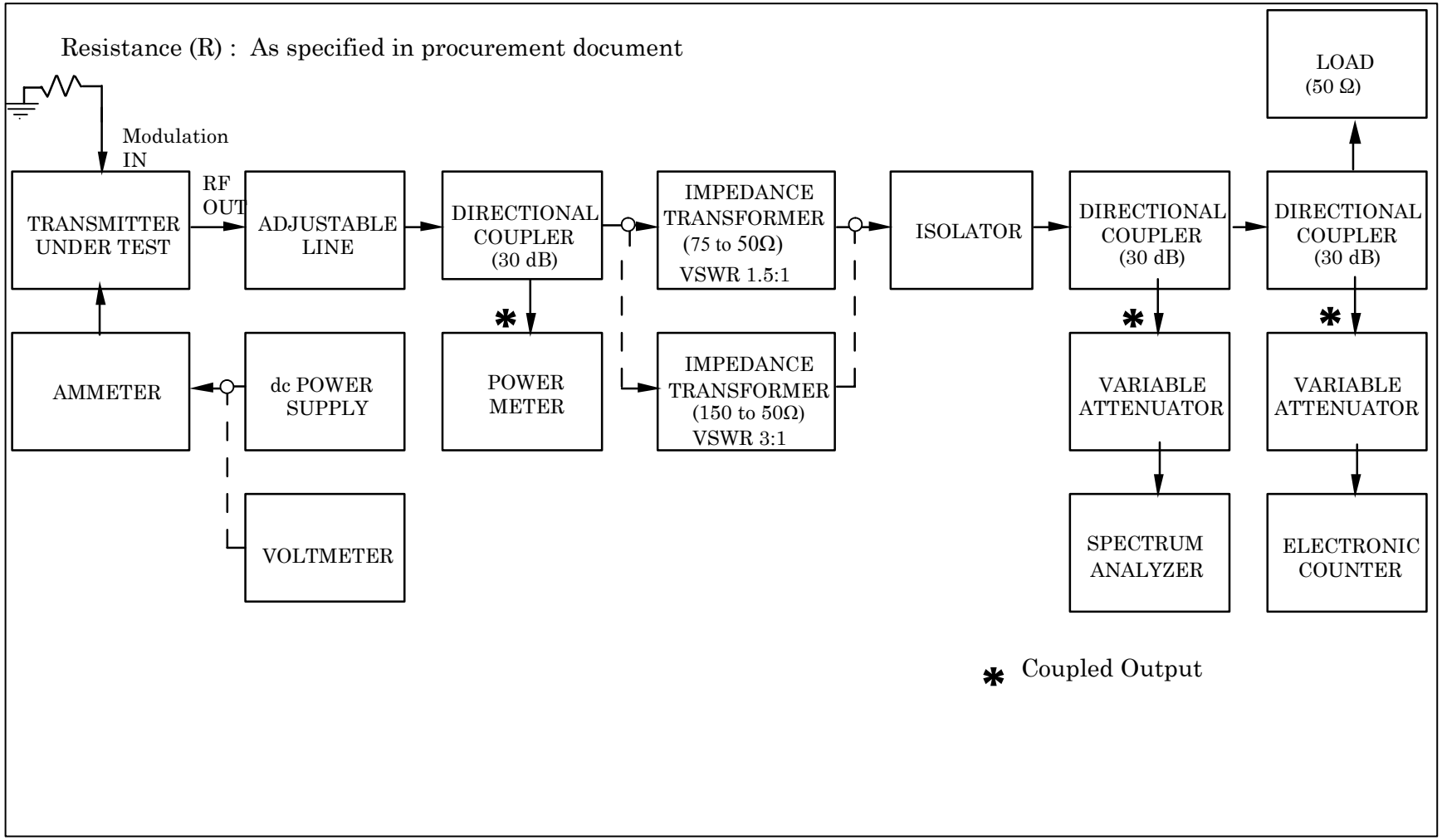

Figure 5-1. Load mismatch test.

DATA SHEET 5.2.1 TELEMETRY TRANSMITTERS

Test 5.2: Load Mismatch

Manufacturer _____ Model _____ Serial No._____

Test Personnel _____ Date _____

	(a)	(b)	(c)		
Load VSWR	1.5 to 1	3 to 1	1.5 to 1	Limit	Units
Output Power (minimum)	_____	_____	_____	As specified in procurement document	watts
Carrier Center Frequency (worst-case)	_____	_____	_____	Within ±0.002 of assigned or as specified in procurement document	%
Incidental FM (maximum)	_____	_____	_____	As specified in procurement document	kHz

Spurious Emissions

Frequency	Level (dBm)	
_____ MHz	_____	–25 dBm or as specified in procurement document
_____ MHz	_____	
_____ MHz	_____	
_____ MHz	_____	
_____ MHz	_____	
_____ MHz	_____	
_____ MHz	_____	

5.3 RF Output Open and Short Circuit Protection Test

5.3.1 Purpose. The malfunction of an antenna component or operator error during testing and installation of a telemetry transmitter may cause the transmitter to be subjected to an open or short condition. The relatively high cost of telemetry transmitters makes it desirable that the transmitter not be damaged when this condition occurs. This test determines the damage, if any, caused by an RF output open or short.

5.3.2 Test Equipment. See paragraph 5.1.1.

5.3.3 Test Method.

5.3.3.1 Setup. Connect test equipment as shown on Figure 5-2.

5.3.3.2 Conditions. Use test conditions described in subparagraph 5.2.3.2.

5.3.3.3 Procedure.

5.3.3.3.1 Disconnect the adjustable line from the transmitter output.

5.3.3.3.2 Apply primary power to the transmitter for 15 minutes and then reconnect the adjustable line and measure and record the following on Data Sheet 5.3.1.

Carrier center frequency

RF output power

Incidental FM

Primary input voltage

Primary input current

5.3.3.3.3 Disconnect the adjustable line from the transmitter output and apply a short to the transmitter output.

5.3.3.3.4 Repeat subparagraph 5.3.3.3.2.

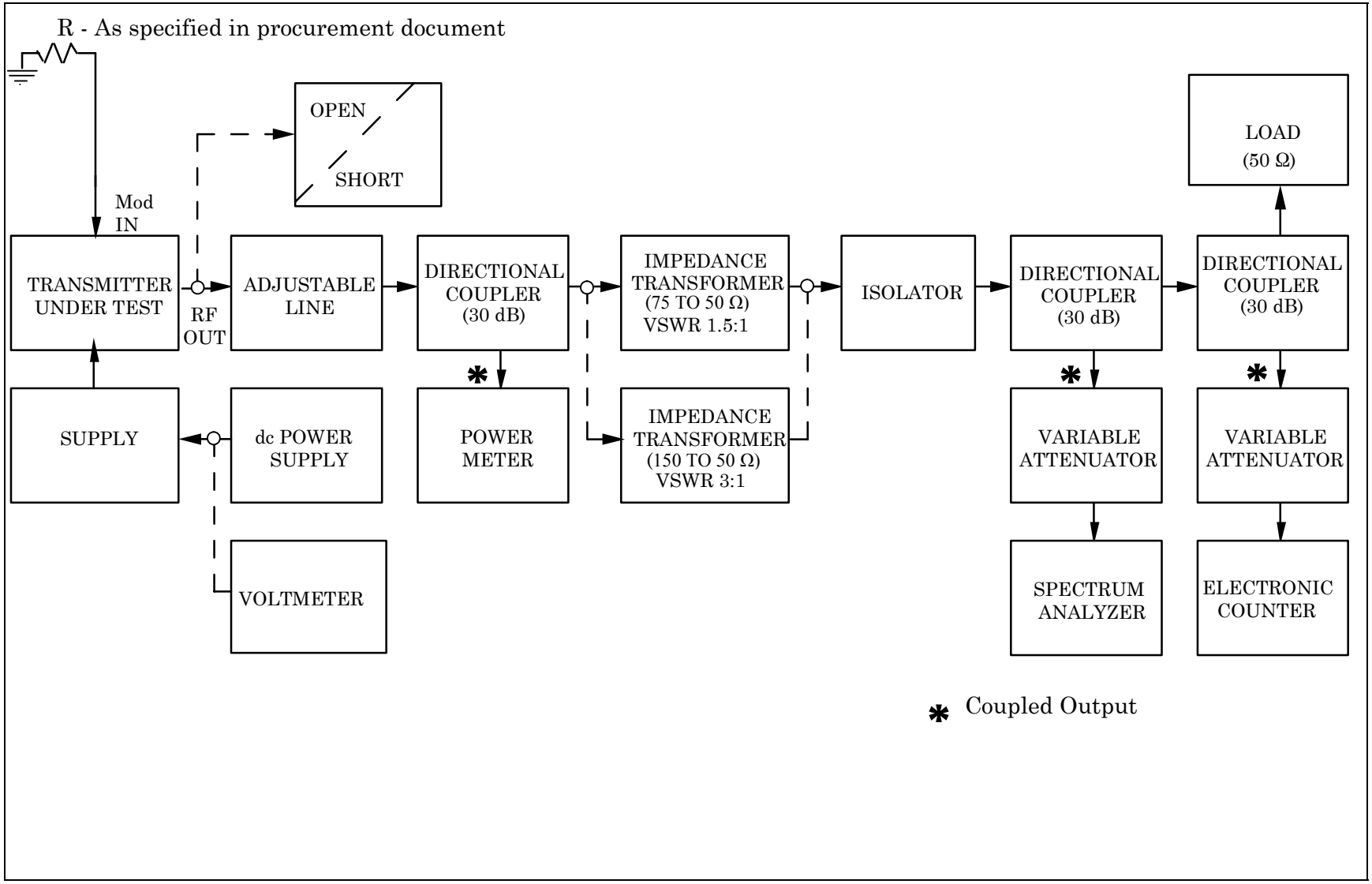

Figure 5-2. RF open and short test.

DATA SHEET 5.3.1 TELEMETRY TRANSMITTERS

Test 5.3: RF Output Open and Short Circuit Protection

Manufacturer _____ Model_____ Serial No. _____

Test Personnel _____ Date _____

	After Open Circuit	After Short Circuit	Limit	Units
Carrier Center Frequency	_____	_____	Within ±0.002 of assigned or as specified in procurement document	%
RF Output Power	_____	_____	As specified in procurement document	watts
Incidental FM (Maximum)	_____	_____	As specified in procurement document	kHz
Primary Input Voltage (E)	_____	_____	As specified in procurement document	volts
Primary Input Current (I)	_____	_____	As specified in procurement document	amps
Primary Power (E • I)	_____	_____	AS SPECIFIED in procurement document	watts

5.4 Incidental Amplitude Modulation (AM) Test

5.4.1 Purpose. Incidental AM occurring in a telemetry transmitter will adversely affect the data quality at the output of a telemetry receiver through variations in transmitter power and the signal-to-noise ratio. Incidental AM can also affect the accuracy of an antenna system that uses the telemetry signal for tracking. This test measures the AM of the transmitter output.

5.4.2 Test Equipment. See paragraph 5.1.1.

5.4.3 Test Method.

5.4.3.1 Setup. Connect test equipment as shown on Figure 5-3.

5.4.3.2 Conditions. Use test conditions described in subparagraph 5.2.3.2.

5.4.3.2.1 Calibration Procedure.

5.4.3.2.1.1 Setup equipment as shown on Figure 5-4.

5.4.3.2.1.2 Tune signal generator to the transmitter assigned frequency.

5.4.3.2.1.3 Amplitude modulate (100 percent AM) with a 1 kHz square wave and set the output to −10 dBm as measured with power meter.

5.4.3.2.2 Disconnect the power meter and connect the generator to the crystal detector.

5.4.3.2.3 Tune the wave analyzer to the fundamental frequency of the square wave, 1 kHz, and measure and record this voltage (the 100 percent AM calibration voltage) on Data Sheet 5.4.1.

5.4.3.3 Procedure.

5.4.3.3.1 Apply primary power to the transmitter and adjust the function generator output to produce a 1 kHz sine wave whose amplitude gives a ±250 kHz carrier deviation. (See Paragraph 5.8 for determination of modulation sensitivity.)

5.4.3.3.2 Adjust the variable attenuator until the power meter reads −10 dBm.

5.4.3.3.3 Remove the power meter and connect the crystal detector to the variable attenuator.

5.4.3.3.4 Tune the wave analyzer to the modulation frequency and measure and record this voltage (incidental AM voltage) on Data Sheet 5.4.1.

5.4.3.3.5 Repeat subparagraph 5.4.3.3.1 through 5.4.3.3.4 above with the test function generator frequency at 100 kHz.

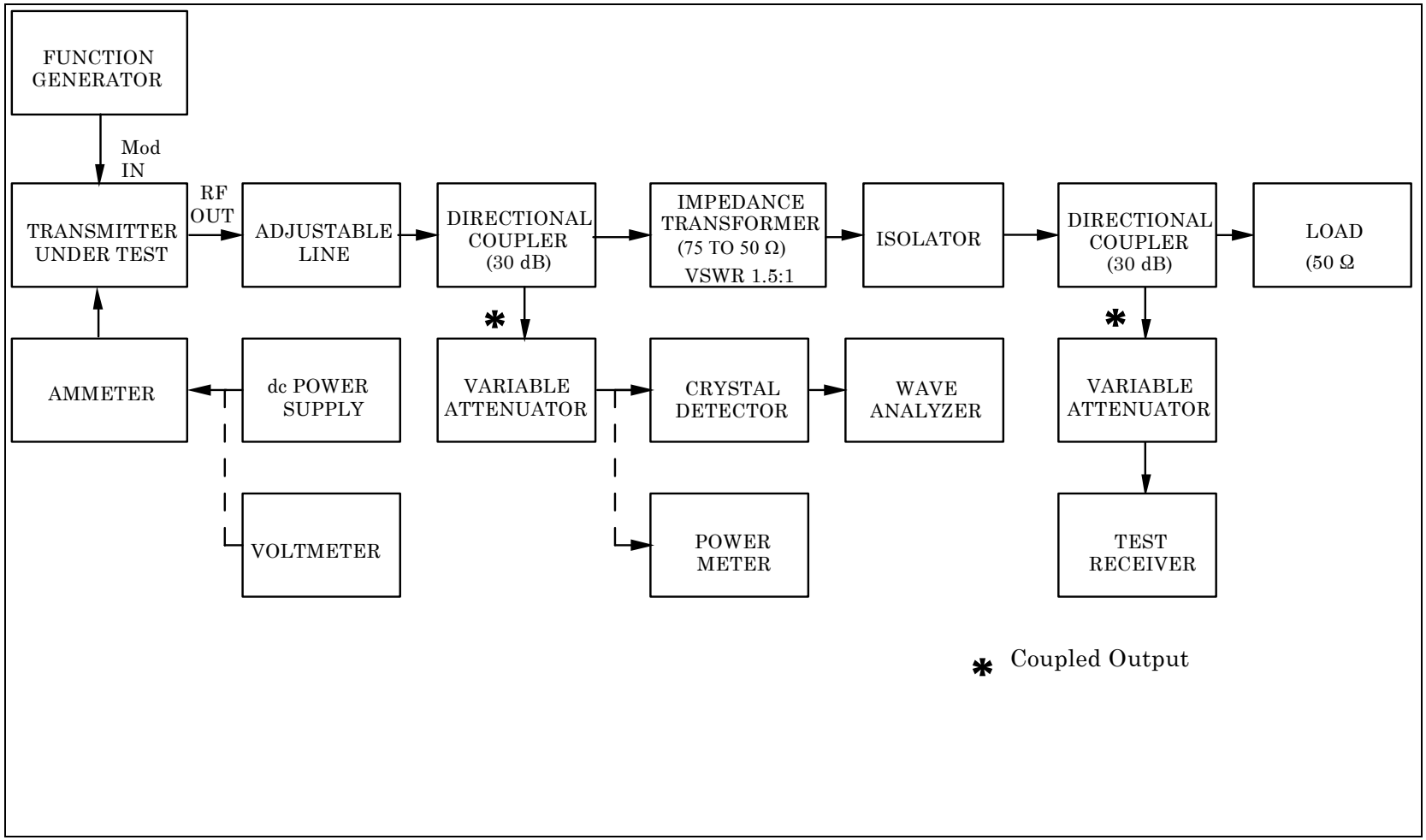

Figure 5-3. Incidental amplitude modulation test.

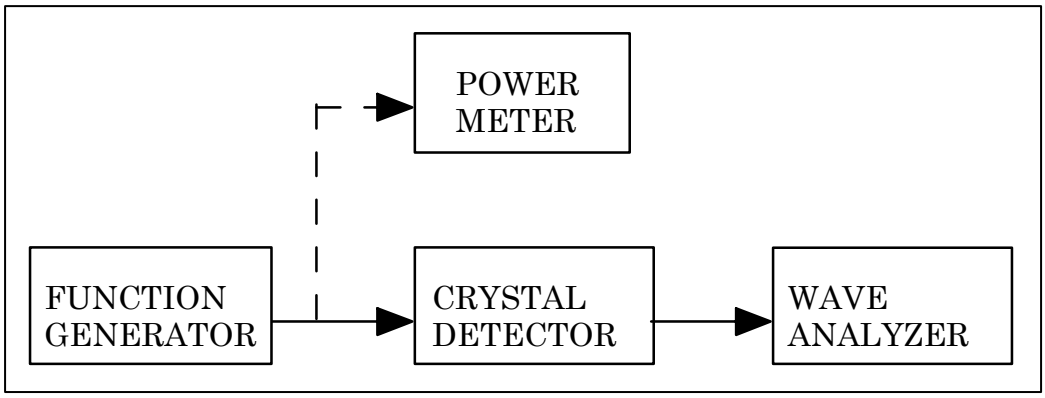

Figure 5-4. Incidental amplitude modulation calibration.

5.4.3.4 Data Reduction. Calculate and record the percent of spurious AM using formula (5-1).

$$\frac{0.318 \cdot \text{Incidental AM (V rms)} \cdot 100\ \%}{100\%\ \text{Calibration (V rms)}} \qquad (5\text{-}1)$$

NOTE

This value is equivalent to the peak AM compared with the unmodulated peak value of the transmitter carrier signal. (See appendix C for derivation formula.)

DATA SHEET 5.4.1 TELEMETRY TRANSMITTERS

Test 5.4: Incidental Amplitude Modulation

Manufacturer _____Model _____Serial No. _____

Test Personnel _____Date _____

Incidental Amplitude Modulation Test

1 kHz Modulation Frequency

Wave Analyzer Indication

100% AM Calibration	Incidental AM
____ V rms	____ V rms

Percent AM*

Measured	Requirement
_____	As specified in procurement document

100 kHz Modulation Frequency

Wave Analyzer Indication

100% AM Calibration	Incidental AM
____ V rms	____ V rms

Percent AM*

Measured	Requirement
_____	As specified in procurement document

$$* \text{ Percent AM} = \frac{0.318 \cdot \text{Incidental AM (V rms)} \cdot 100\%}{\text{100\% AM Calibration (V rms)}} \qquad (5\text{-}2)$$

5.5 Modulation (ac) Linearity Test

5.5.1 Purpose. The demodulated receiver output must accurately reflect the amplitude of the input to the transmitter or data quality will be adversely affected. In pulse code modulation (PCM) systems using an analog transmitter, poor ac modulation linearity will increase the bit error rate of the received data. In pulse amplitude modulation (PAM) and FM/FM systems poor ac modulation linearity will have a greater adverse effect on the quality of received data. This test determines the ac linearity of the output frequency versus the rms input modulating voltage.

5.5.2 Test Equipment. See paragraph 5.1.1.

5.5.3 Test Method.

5.5.3.1 Setup. Connect test equipment as shown on Figure 5-5.

5.5.3.2 Conditions. Use test conditions described in subparagraph 5.2.3.2.

5.5.3.3 Procedure.

5.5.3.3.1 Disconnect the modulation input termination.

5.5.3.3.2 Connect the function generator output through the voltage divider and amplifier to the modulation input.

5.5.3.3.3 Set the decade voltage divider to 1.

5.5.3.3.4 Adjust the function generator to produce a 10 kHz sine wave whose amplitude produces a peak carrier deviation as specified in the procurement document. (See paragraph 5.8 for determination of modulation sensitivity.)

5.5.3.3.5 Measure the test receiver output voltage with the wave analyzer. Record this voltage on Data Sheet 5.5.1 opposite "Modulation," step 11.

5.5.3.3.6 Set the decade voltage divider to 0.90000, which decreases the modulation voltage by 10 percent. Record the wave analyzer voltage reading on Data Sheet 5.5.1 opposite "Modulation," step 10.

5.5.3.3.7 Continue to reduce the modulation voltage by 10 percent of the initial voltage until a 0-volt input is obtained. Record the wave analyzer voltage reading opposite the appropriate modulation step number.

5.5.3.4 Data Reduction. Calculate and record nonlinearity by the least squares method (see Appendix D).

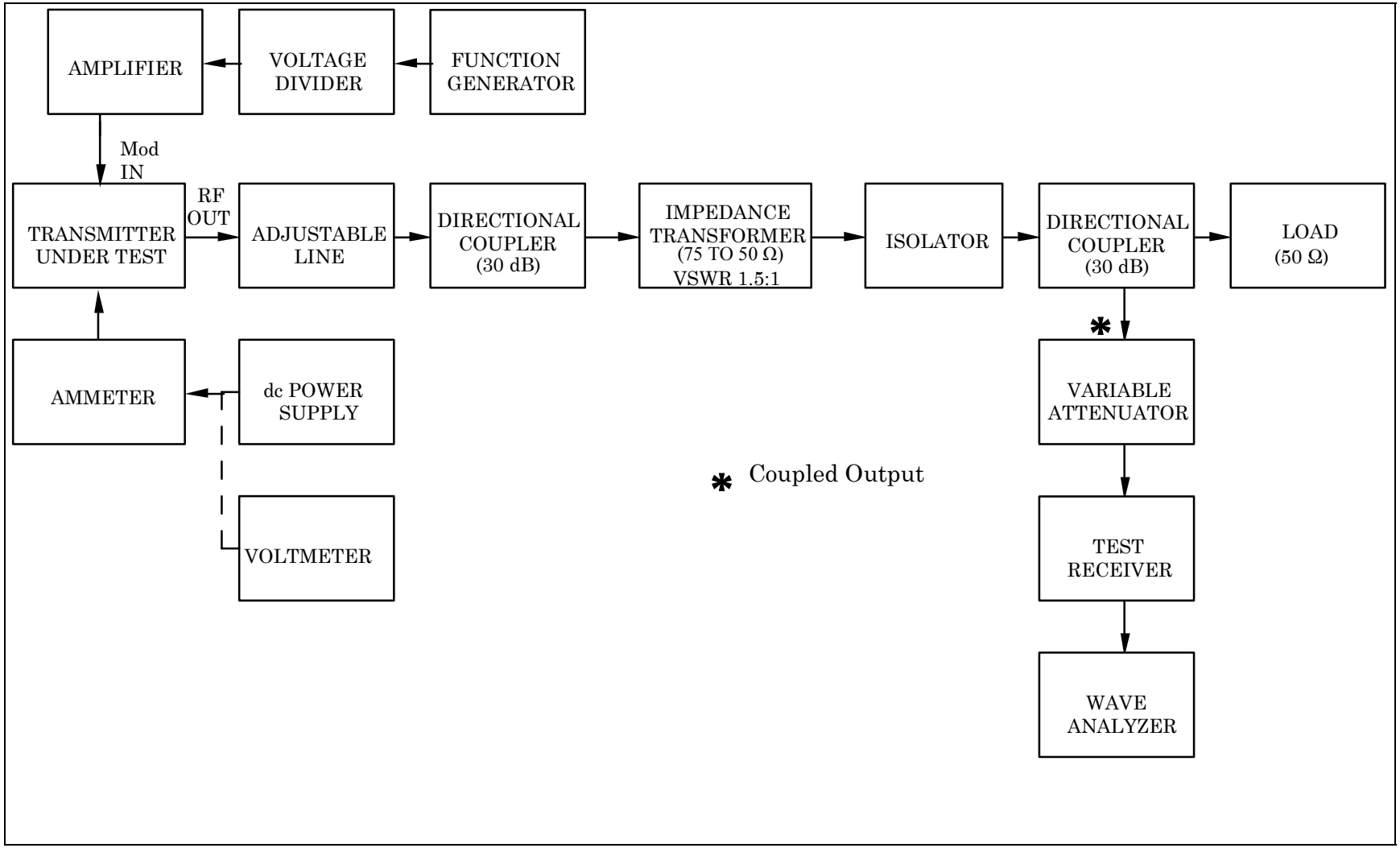

Figure 5-5. Modulation (ac) linearity test.

DATA SHEET 5.5.1 TELEMETRY TRANSMITTERS

Test 5.5: Modulation (ac) Linearity

Manufacturer _____ Model _____ Serial No. _____

Test Personnel _____ Date _____

±Deviation

Modulation Step No.	Deviation	Output Voltage (rms volts)
11	_____kHz	_____
10	*	_____
9		_____
8		_____
7		_____
6		_____
5		_____
4		_____
3		_____
2		_____
1	*	_____

Maximum Vertical Excursion From Best Straight Line	ac Modulation Linearity (%) Calculated	Requirement
_____	_____ %	_____ (As specified in procurement document.)

*Deviation as applicable for test conditions.

5.6 Modulation (dc) Linearity Test

5.6.1 Purpose. Transmitters that are dc coupled may be required for some types of telemetry systems. Systems transmitting nonrandom PCM, pulse amplitude modulation (PAM), or some event marker data may require this type of transmitter. This test determines the linearity of the output frequency versus the dc input modulating voltage for dc-coupled transmitters.

5.6.2 Test Equipment. See paragraph 5.1.1.

5.6.3 Test Method.

5.6.3.1 Setup. Connect test equipment as shown on Figure 5-6.
.

5.6.3.2 Conditions. Use test conditions described in subparagraph 5.2.3.2.

5.6.3.3 Procedure.

5.6.3.3.1 Disconnect modulation input termination.

5.6.3.3.2 Connect a power supply set to 0 Vdc through the voltage divider to the modulation input.

5.6.3.3.3 Set the voltage divider at 0.

5.6.3.3.4 Measure the carrier frequency and record it on Data Sheet 5.6.1, step 6.

5.6.3.3.5 Adjust the divider to 1.

5.6.3.3.6 Adjust the power supply output voltage to produce the maximum specified carrier frequency above that measured in subparagraph 5.6.3.3.4. Record frequency on Data Sheet 5.6.1, step 11. Measure dc modulation voltage and record it on Data Sheet 5.6.1 under "Modulation Volts dc," step 11.

5.6.3.3.7 Calculate and record the four equal increment modulation voltages between steps 6 and step 11 on Data Sheet 5.6.1.

5.6.3.3.8 Using the divider, apply the modulation voltages recorded for steps 7 through 10 on Data Sheet 5.6.1 and record the corresponding carrier frequency for each step.

5.6.3.3.9 Reverse the polarity of the dc voltage applied to the voltage divider.

5.6.3.3.10 Adjust the divider to 1.

5.6.3.3.11 Adjust the power supply output voltage to produce the maximum specified carrier frequency below that measured in subparagraph 5.6.3.3.4. Record the carrier frequency on Data Sheet 5.6.1, step 1. Measure the dc modulation voltage and record on Data Sheet 5.6.1 under "Modulation Volts dc," step 1.

5.6.3.3.12 Calculate and record the four equal-increment modulation voltage steps between steps 1 and 6 on Data Sheet 5.6.1.

5.6.3.3.13 Using the divider, apply the modulation voltages recorded for steps 2 through 5 on Data Sheet 5.6.1 and record the corresponding carrier frequency for each step.

5.6.3.4 Data Reduction. Calculate nonlinearity by the least squares method and record (see Appendix B).

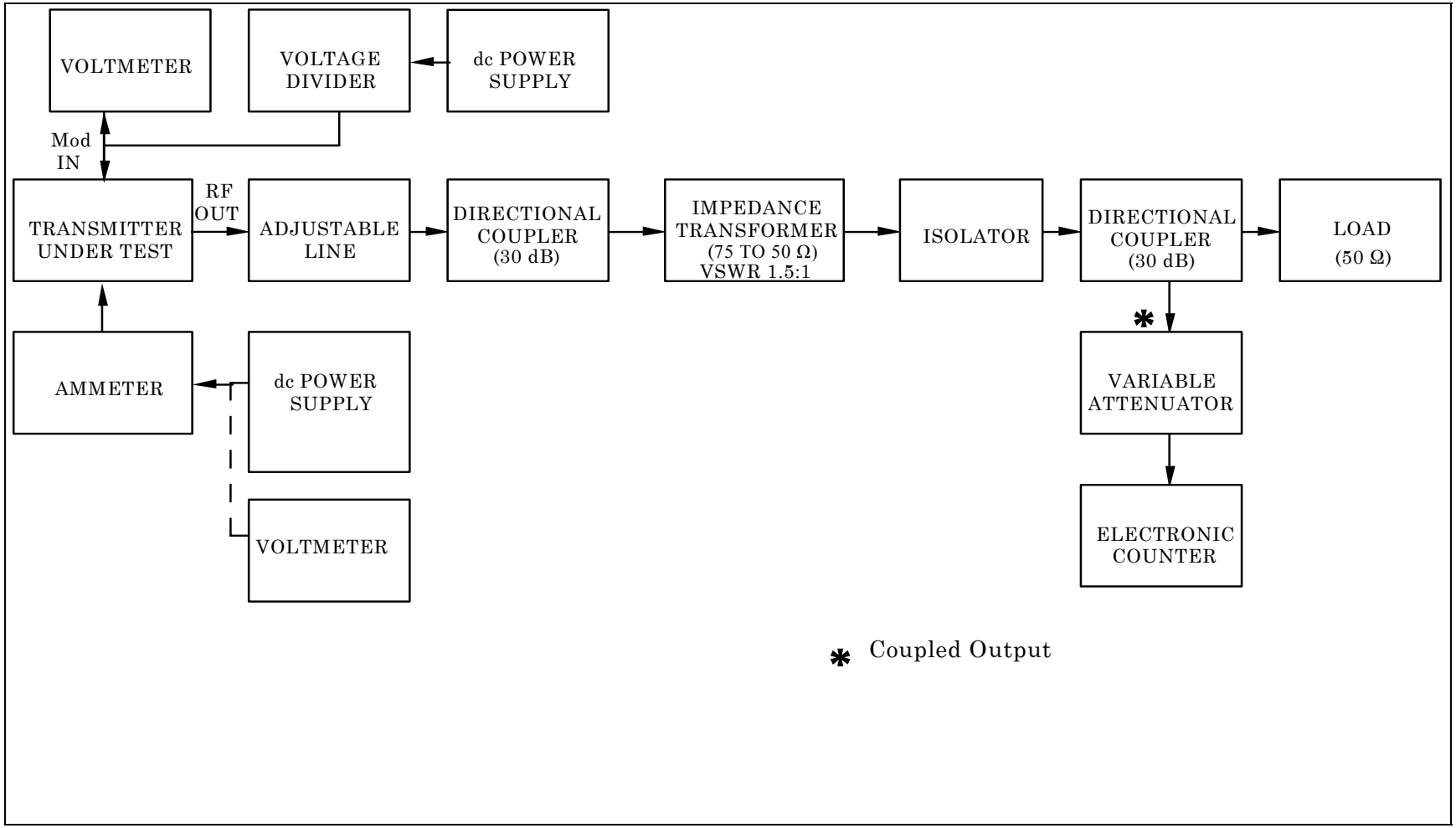

Figure 5-6. Modulation (dc) linearity test.

DATA SHEET 5.6.1 TELEMETRY TRANSMITTERS

Test 5.6: Modulation (dc) Linearity

Manufacturer _____ Model _____ Serial No. _____

Test Personnel _____ Date _____

Step No.	Modulation Volts dc	Deviation	Carrier Frequency (MHz)
11	_____	kHz	_____
10	_____	*	_____
9	_____		_____
8	_____		_____
7	_____	*	_____
6	Zero	Zero	_____
5	_____	*	_____
4	_____		_____
3	_____		_____
2	_____	*	_____
1	_____		_____

Maximum Vertical Excursion from Best Straight Line	Modulation (dc) Linearity (%) Calculated	Requirement
_____ MHz	_____%	_____ (As specified in procurement document.

*Deviation as applicable for test conditions.

5.7 Modulation Input Impedance Test

5.7.1 Purpose. The amplitude accuracy of transmitted data can be adversely affected by a load mismatch at the transmitter's modulation input. The input impedance can also cause unwanted filtering and oscillations at harmonic frequencies, and a load mismatch can also overload and damage the driver circuitry feeding the transmitters modulation input. This test measures the input resistance and capacitance of the modulation section of the transmitter.

5.7.2 Test Equipment. See paragraph 5.1.1.

5.7.3 Test Method.

5.7.3.1 Setup. Connect test equipment as shown on Figure 5-7.

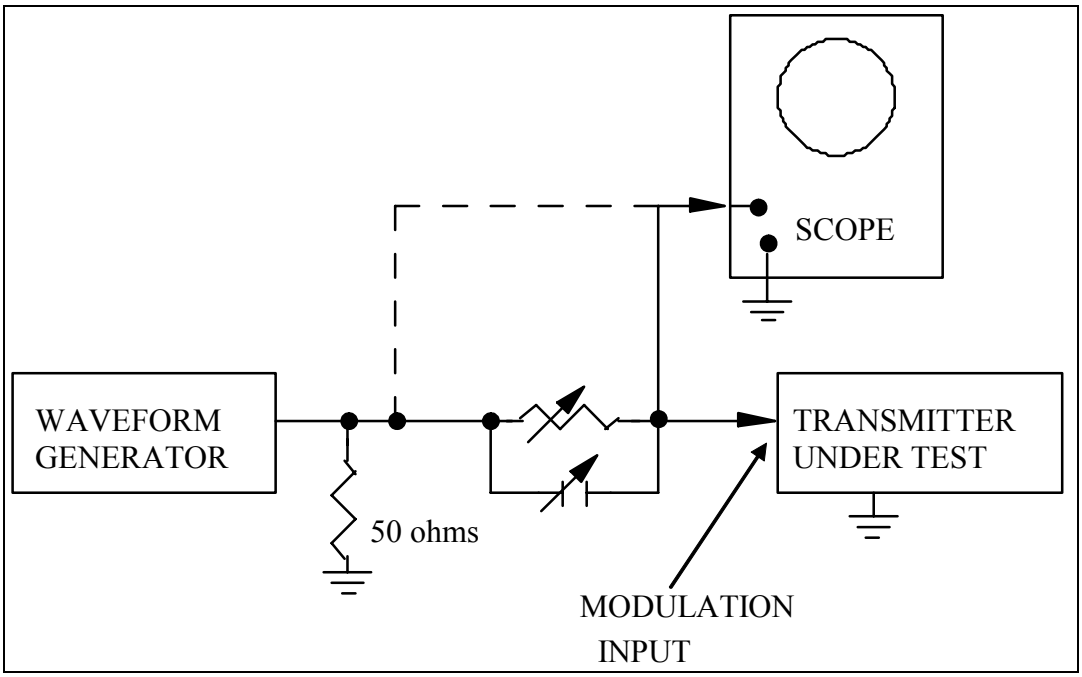

Figure 5-7. Modulation input impedance test.

5.7.3.2 Conditions. Use test conditions described in subparagraph 5.2.3.2 where applicable.

5.7.3.3 Procedure.

5.7.3.3.1 With the transmitter operating, adjust the square wave generator to produce an output signal with the amplitude and frequency specified in the transmitter procurement document.

5.7.3.3.2 Observe and note the output amplitude on the oscilloscope.

5.7.3.3.3 Move the oscilloscope probe to the transmitter modulation input.

5.7.3.3.4 Adjust the variable resistor and capacitor until the amplitude observed on the oscilloscope is half that observed in subparagraph 5.7.3.3.2, and the waveform is the same as that observed. The values of the adjustable capacitor and resistor then match the internal resistance and shunt capacitance of the transmitter modulation input and test cables.

5.7.3.3.5 Eliminate the lead capacitance of the test setup by replacing the transmitter with a resistor equivalent to the transmitter input resistance obtained above.

5.7.3.3.6 Adjust the variable capacitor until the waveform is the same as that observed above.

5.7.3.4 Data Reduction. Calculate the input capacitance of the transmitter by subtracting the value of the capacitance obtained in subparagraph 5.7.3.3.6 from that obtained in subparagraph 5.7.3.3.4. Record the measured values on Data Sheet 5.7.1.

DATA SHEET 5.7.1 TELEMETRY TRANSMITTERS

Test 5.7: Modulation Input Impedance

Manufacturer _____ Model _____ Serial No. _____

Test Personnel _____ Date _____

Input Resistance		Input Capacitance	
Measurement	Requirement	Measurement	Requirement
_____	_____ (As specified in procurement document)	_____	_____ (As specified in procurement document)

5.8 Modulation Sensitivity Test

5.8.1 Purpose. The correct modulation sensitivity is critical in obtaining optimum data quality for a telemetry data link. Test method 1 determines the modulation sensitivity of the transmitter under test at a reference frequency using a calibrated test receiver. Test method 2 determines the modulation sensitivity of the transmitter under test at a reference frequency by finding the amplitude of the transmitter modulation input that produces the first Bessel null when the transmitter is modulated by a sine wave at the reference frequency.

5.8.2 Test Equipment. See paragraph 5.1.1.

5.8.3 Test Method 1.

5.8.3.1 Setup. Connect test equipment as shown on Figure 5-8.

5.8.3.2 Conditions. Use test conditions described in subparagraph 5.2.3.2. This test should be performed at other temperatures as required.

5.8.3.3 Procedure.

5.8.3.3.1 Calibrate the test receiver video output as follows (see Figure 5-9).

5.8.3.3.1.1 Set the function generator to produce a 41.58 kHz sine wave.

5.8.3.3.1.2 Connect the function generator to the frequency modulation input of the RF signal generator.

5.8.3.3.1.3 Adjust the function generator output voltage until the first carrier null is observed on the spectrum analyzer.

5.8.3.3.1.4 The RF carrier peak deviation is now 100 kHz. Adjust the test receiver video gain to give a convenient value on the rms voltmeter. Record this value on Data Sheet 5.8.1.

5.8.3.3.2 Connect test equipment as shown on Figure 5-8. Apply a 1-Vrms (or other specified reference level) sine wave at a frequency of 10 kHz (or other specified reference frequency) to the transmitter modulation input. Measure the rms voltages at the transmitter modulation input and the test receiver video output and record on Data Sheet 5.8.1.

5.8.3.4 Data Reduction. Calculate transmitter sensitivity as shown on Data Sheet 5.8.1. The units are kHz peak deviation/peak volt or kHz rms deviation/rms volt.

5.8.4 Test Method 2.

5.8.4.1 Setup. Connect test equipment as shown in Figure 5-10.

5.8.4.2 Conditions. Use test conditions described in subparagraph 5.2.3.2. This test should be performed at other temperatures as required.

5.8.4.3 Procedure.

5.8.4.3.1 Find the reference frequency for this test (frequency modulation) by dividing the transmitter's nominal peak deviation (in the intended application) by 2.4. Select an appropriate reference frequency if a phase-modulated transmitter is being tested.

5.8.4.3.2 Set the function generator to produce a sine wave with a frequency equal to the reference frequency calculated or selected above. Set the amplitude of the function generator to minimum amplitude.

5.8.4.3.3 Connect the function generator to the frequency (or phase) modulation input of the transmitter under test. Connect the transmitter radio frequency output to the spectrum analyzer (using appropriate attenuators). Set the spectrum analyzer span to 5 to 10 times the reference frequency.

5.8.4.3.4 Slowly increase the amplitude of the function generator output voltage until the first carrier null is observed on the spectrum analyzer. The amplitude of the first sideband pair should be approximately 1.6 dB larger than the amplitude of the second sideband pair.

5.8.4.3.5 Measure the amplitude of the transmitter input (V rms). Record this value on Data Sheet 5.8.2.

5.8.4.4 Data Reduction. Calculate transmitter sensitivity as shown on Data Sheet 5.8.2. The units are kHz (or radians) peak deviation/peak volt or kHz (or radians) rms deviation/rms volt.

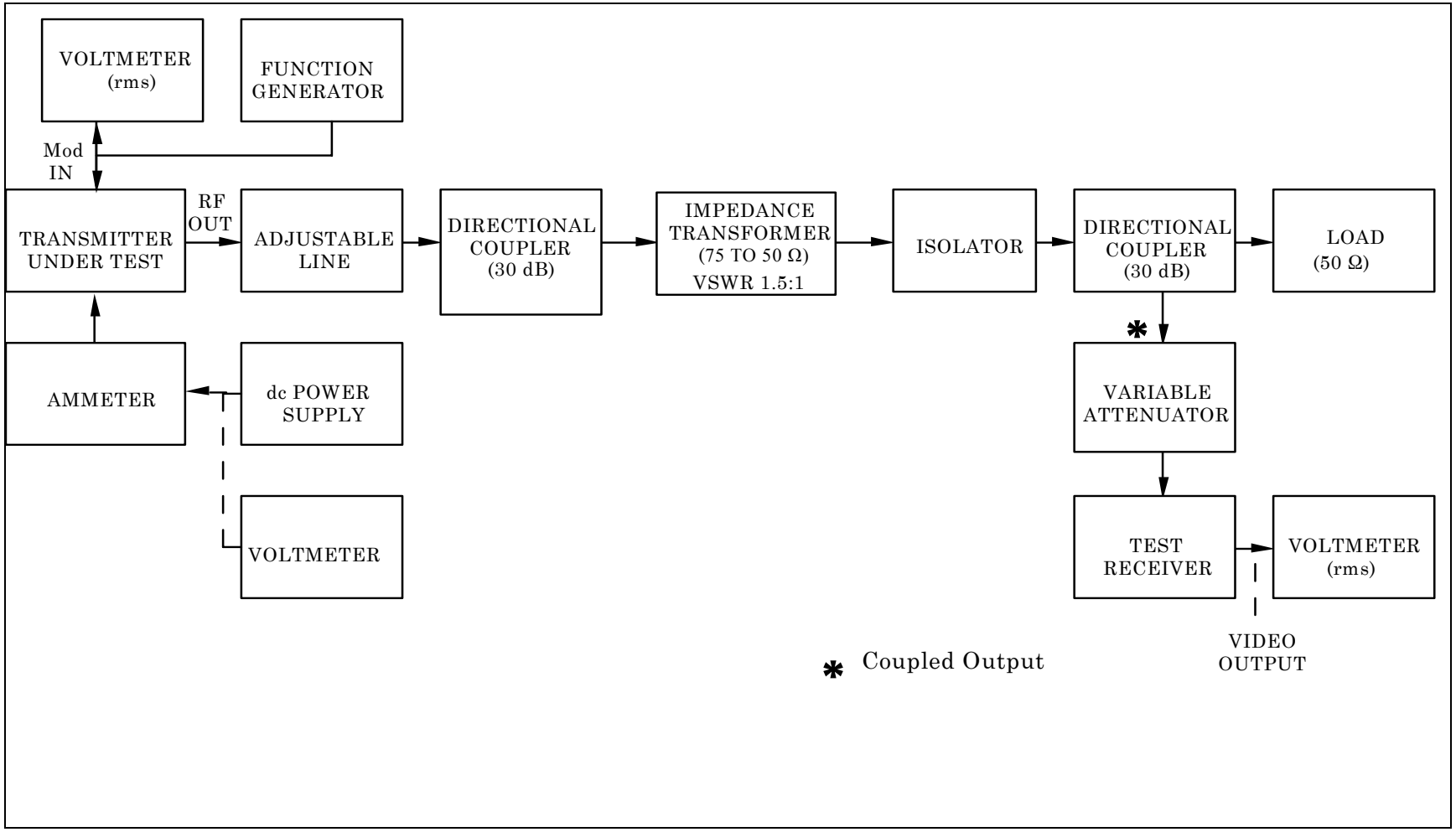

Figure 5-8. Modulation sensitivity test.

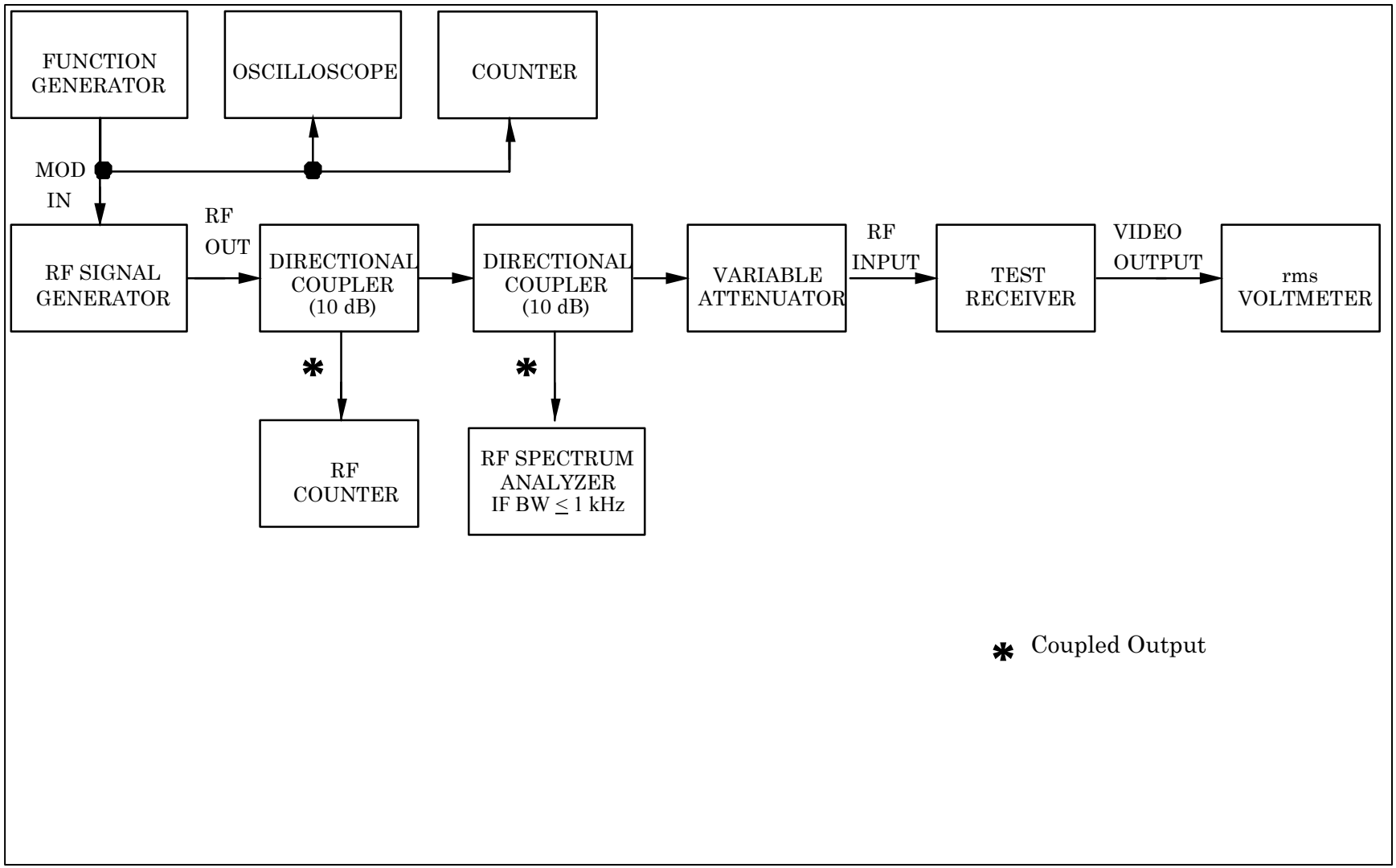

Figure 5-9. Modulation sensitivity calibration test.

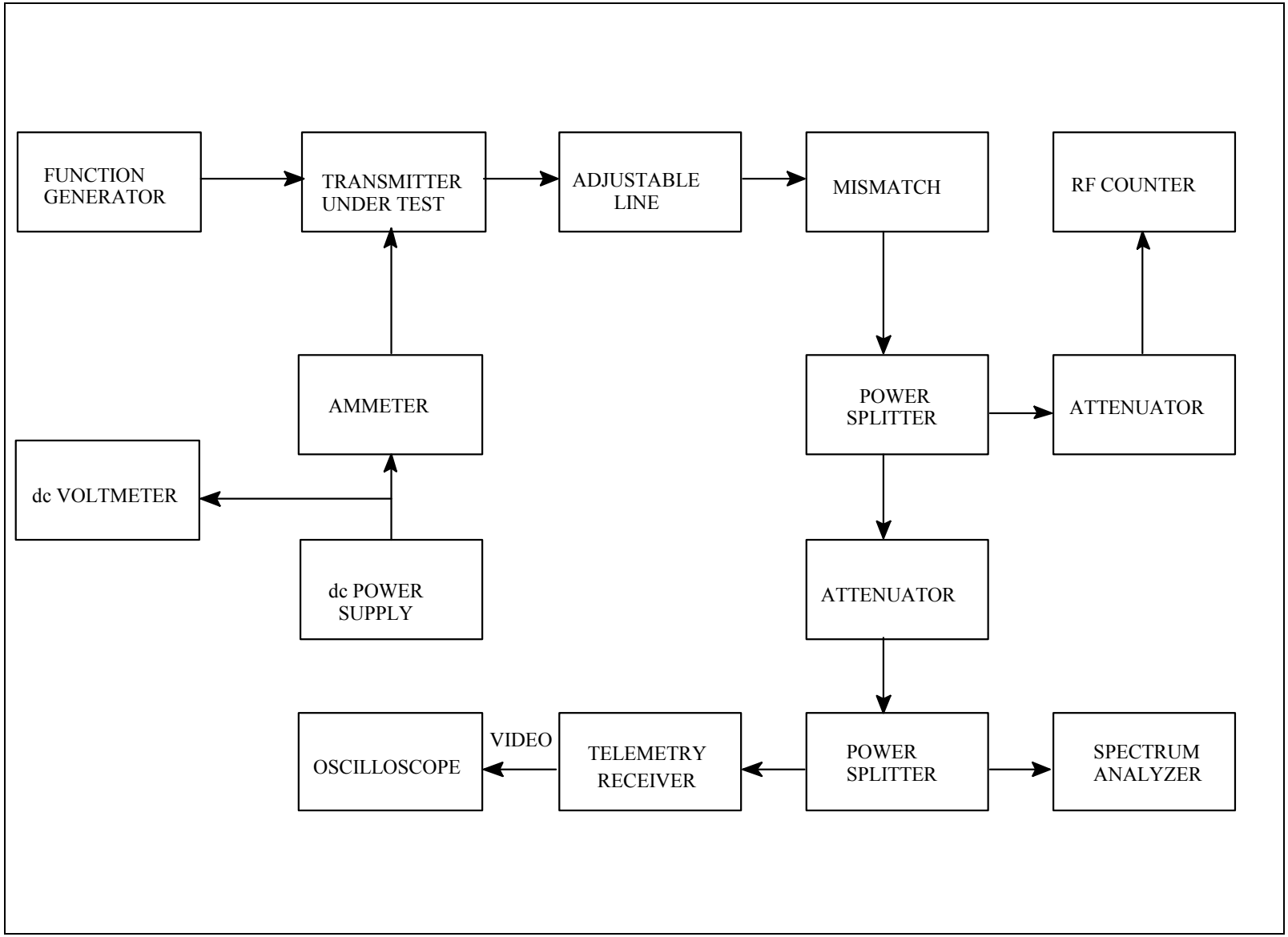

Figure 5-10. Modulation sensitivity test using Bessel null method.

DATA SHEET 5.8.1 TELEMETRY TRANSMITTERS

Test 5.8: Modulation Sensitivity (Calibrated Test Receiver Method)

Manufacturer _____ Model _____ Serial No. _____

Test Personnel _____ Date _____

Test receiver sensitivity	_____	volts rms 100 kHz peak deviation
Transmitter input	_____	volts rms
Test receiver output	_____	volts rms
Transmitter sensitivity	_____	kHz/volt

$$\text{Transmitter sensitivity} = \frac{70.7 \cdot \text{Test receiver output}}{\text{Transmitter input} \cdot \text{Test receiver sensitivity}} \qquad (5\text{-}3)$$

DATA SHEET 5.8.2 TELEMETRY TRANSMITTERS

Test 5.8: Modulation Sensitivity (Bessel null method)

Manufacturer _____ Model _____ Serial No. _____

Test Personnel _____ Date _____ Temperature _____

Reference frequency _____ kHz

Transmitter input _____ volts rms

Frequency-modulated transmitter

$$\text{Transmitter sensitivity} = \frac{2.405 \cdot \text{Reference frequency}}{\text{Transmitter Input} \cdot 1.414} \qquad (5\text{-}4)$$

Transmitter sensitivity = _____ kHz/volt

Phase-modulated transmitter

$$\text{Transmitter sensitivity} = \frac{2.405}{\text{Transmitter input} \cdot 1.414} \qquad (5\text{-}5)$$

Transmitter sensitivity = _____ radians/volt

5.9 Modulation Frequency Response Test

5.9.1 Purpose. The minimum and maximum frequency response required of a telemetry transmitter should be specified. Transmitters that do not meet the required frequency response for the data being transmitted will adversely affect data quality because of amplitude reduction of high frequencies caused by transmitter-induced filtering. The first test determines the modulation frequency response of the transmitter under test using a test receiver. The second test determines the modulation frequency response of a frequency-modulated transmitter using the ratio of the amplitude of the remnant carrier (J_0) to the amplitude of the first sideband (J_1). The second technique is recommended if the bandwidth of the test receiver (measured at the video output) is less than two times the specified modulation bandwidth of the transmitter. A short description of this method follows. The frequency response can be determined from the change in peak deviation as a function of modulation frequency. If a carrier is modulated with a single sine wave, the relative amplitudes of the carrier components can be used to determine the peak deviation. The values of the modulation index (β) for the first two carrier nulls are approximately 2.405 and 5.52. If the modulation amplitude is set to a very low value and the amplitude increased slowly until the first carrier null occurs (monitor modulated carrier on spectrum analyzer), the amplitude that produces a peak deviation of approximately 2.405 times the modulating frequency is found. At this modulation index, the amplitude of the second sideband should be at least 1 dB lower than the amplitude of the first sideband, and the amplitudes of the higher-order sidebands should decrease rapidly. The relative amplitudes of the carrier and sidebands can also be used to calculate the peak deviation when it is not possible to vary parameters to achieve a null. Peak deviation is equal to β times the modulating frequency.

5.9.2 Test Equipment. See paragraph 5.1.1.

5.9.3 Test Method 1.

5.9.3.1 Setup. Connect test equipment as shown on Figure 5-11.

5.9.3.2 Conditions. Use test conditions described in subparagraph 5.2.3.2.

CAUTION	To prevent damage to the transmitter, do not apply more than the maximum voltage specified in the procurement document to the modulation input.

5.9.3.3 Procedure.

5.9.3.3.1 Connect the function generator to the modulation input. Generator output must be a sine wave for this test.

5.9.3.3.2 While keeping the modulation voltage at the transmitter input constant, vary the frequency of the modulation input signal from the minimum specified in the procurement document to the maximum specified. Record voltage (in dB) at the video output of the test receiver on Data Sheet 5.9.1.

NOTE

A sufficient number of data points shall be taken to give a good representation of the frequency response characteristic. Additional points may be required to define abrupt changes in slope.

5.9.3.3.3 Determine the modulation sensitivity at dc.

5.9.3.3.3.1 Modulate the transmitter with 0 Vdc and record the transmitter output frequency on Data Sheet 5.9.1.

5.9.3.3.3.2 Modulate the transmitter with 1 Vdc and record the transmitter output frequency on Data Sheet 5.9.1.

5.9.3.3.3.3 Subtract the frequency measured in subparagraph 5.9.3.3.3.1 from the frequency measured in subparagraph 5.9.3.3.3.2. Take the absolute value of the result. This is the modulation sensitivity at dc (kHz/volt).

5.9.3.4 Data Reduction. Frequency response is calculated by subtracting the test receiver output (in dB) at the reference frequency from the value at each frequency. The dc frequency response is calculated from

$$20\log\left(\frac{dc\ modulation\ sensitivity}{10\,kHz\ modulation\ sensitivity}\right) \tag{5-6}$$

NOTE

See paragraph 5.7 for 10 kHz modulation sensitivity. Frequencies other than 10 kHz can be used for the reference frequency, if desired.

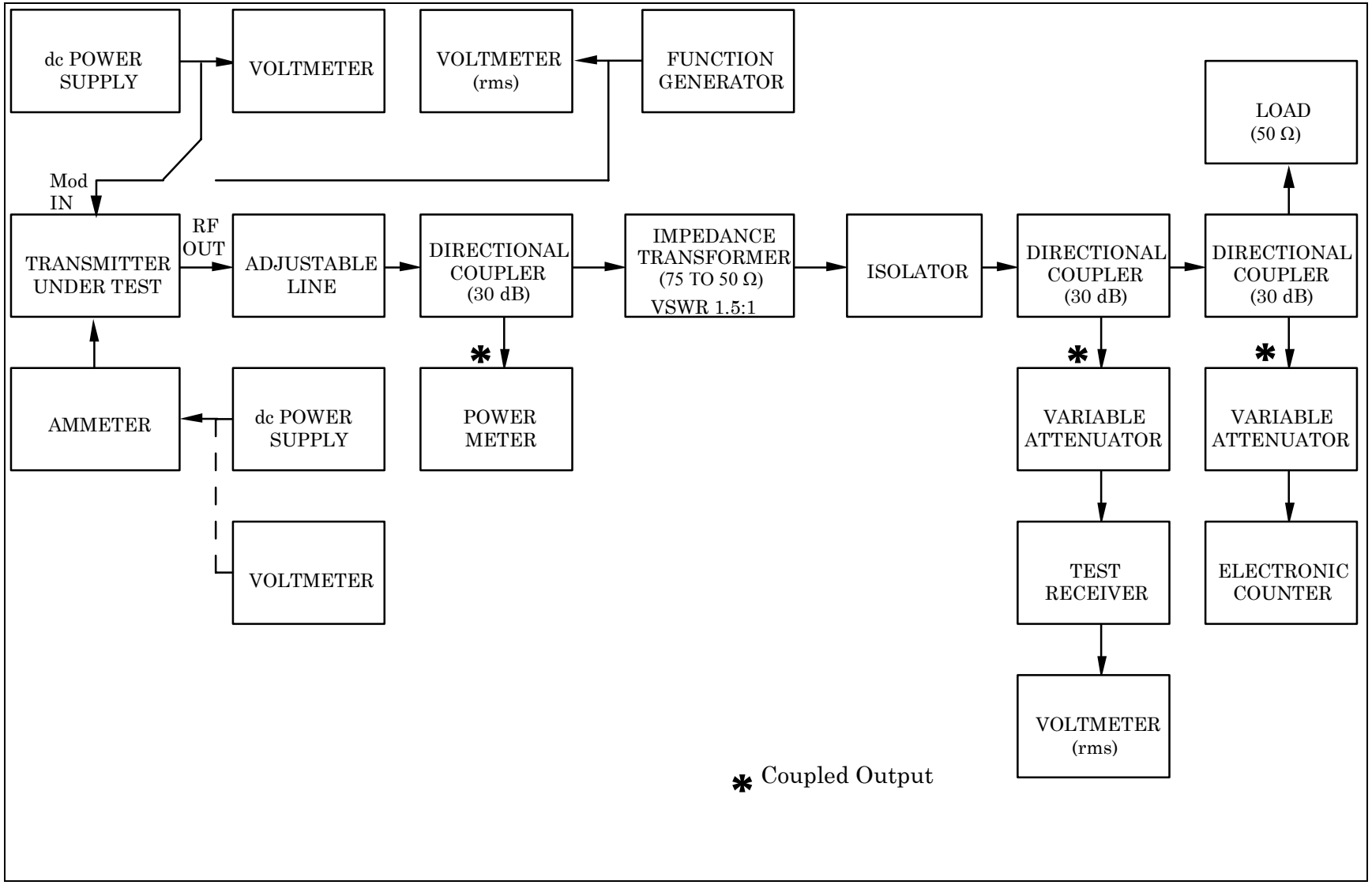

Figure 5-11. Modulation frequency response test.

DATA SHEET 5.9.1 TELEMETRY TRANSMITTERS

Test 5.9: Modulation Frequency Response

Manufacturer _____ Model _____ Serial No. _____

Test Personnel _____ Date _____

Transmitter Input _____ volts rms

Transmitter Frequency with 0-Vdc modulation _____

Transmitter Frequency with 1-Vdc modulation _____

Frequency	Test Receiver Output (dB)	Frequency Response (dB)
10 kHz	_____	0
dc	NA	_____
_____	_____	_____
_____	_____	_____
_____	_____	_____
_____	_____	_____
_____	_____	_____
_____	_____	_____
_____	_____	_____
_____	_____	_____
_____	_____	_____
_____	_____	_____

5.9.4 Test Method 2.

5.9.4.1 Setup. Connect test equipment as shown in Figure 5-12.

5.9.4.2 Conditions. Use test conditions described in subparagraph 5.2.3.2

5.9.4.3 Procedure.

5.9.4.3.1 Connect the function generator to the modulation input. The generator output must be a sine wave for this test. Set the frequency of the generator to the nominal peak deviation of the transmitter divided by 2.405. This frequency will be called the reference frequency. Connect the transmitter radio frequency output to the spectrum analyzer (using appropriate attenuators). Set the spectrum analyzer span to 5 to 10 times the reference frequency. Slowly increase the amplitude of the function generator output voltage until the first carrier null is observed on the spectrum analyzer. The amplitude of the first sideband pair should be approximately 1.6 dB larger than the amplitude of the second sideband pair.

5.9.4.3.2 While keeping the modulation voltage at the transmitter input constant, vary the frequency of the modulation input signal (and vary the spectrum analyzer span correspondingly) from approximately 1.5 times the reference frequency to the maximum frequency specified in the procurement document. Record the amplitudes (in dBm) of J_0 and J_1 on Data Sheet 5.9.2.

NOTE

A sufficient number of data points shall be taken to give a good representation of the frequency response characteristic.

5.9.4.4 Data Reduction. Frequency response (in dB) is calculated using 20 log (peak deviation at measurement frequency/peak deviation at reference frequency). The equations in Table 5-2 can be used to calculate the approximate modulation index from the difference in amplitude between J_0 and J_1. The peak deviation is equal to the modulation index times the modulating frequency.

TABLE 5-2. COEFFICIENTS OF EQUATION FOR USING $J_0 - J_1$ (dB) CALCULATE MODULATION INDEX (β) for $0.1 < \beta < 1.6$.

Minimum J_0–J_1 (dB)	Maximum J_0–J_1 (dB)	a_0	a_1	a_2	Maximum Error
16.5	26	1.1237	–0.06922	0.001150	0.0017
10	16.5	1.4582	–0.10886	0.002332	0.0007
6	12.7	1.4962	–0.11530	0.002601	0.0004
2.5	7	1.4540	–0.10191	0.001545	0.0009
3.5	6	1.4560	–0.10233	0.001546	0.0002
–2	2.5	1.4345	–0.08780	–0.001232	0.0010

$$\beta = a_0 + a_1x + a_2x^2 \tag{5-7}$$

where:

$x = (J_0 - J_1)$ (dB)
β = peak deviation ÷ modulating frequency

Many modern spectrum analyzers allow the measurement of the difference in amplitude between two components simply and accurately. The equations in Table 5-2 are useful when the higher order components (J_2, J_3, etc.) are at least 5 dB lower in amplitude than the smaller of J_0 and J_1. This circumstance occurs when the modulation index is less than approximately 1.6. The equations were developed by fitting a least squares curve of the form $\beta = a_0 + a_1x + a_2x^2$ to the theoretical values for β, $J_0(\beta)$, and $J_1(\beta)$. The accuracy of these equations is better than 0.5 percent for $J_0 - J_1 < 20$ dB. As an example, assume than J_0 is 6 dB larger than J_1 and all other components are at least 10 dB lower than J_1. The fifth set of coefficients has the lowest maximum error of the sets that include 6 dB for $J_0 - J_1$. Using this equation,

$$\beta = 1.456 + (-0.10233)(6) + 0.001546\,(6)^2 = 0.8977 \tag{5-8}$$

When $J_0 - J_1$ is greater than 20 dB, β can be approximated by $2 \bullet 10^{(-x/20)}$.

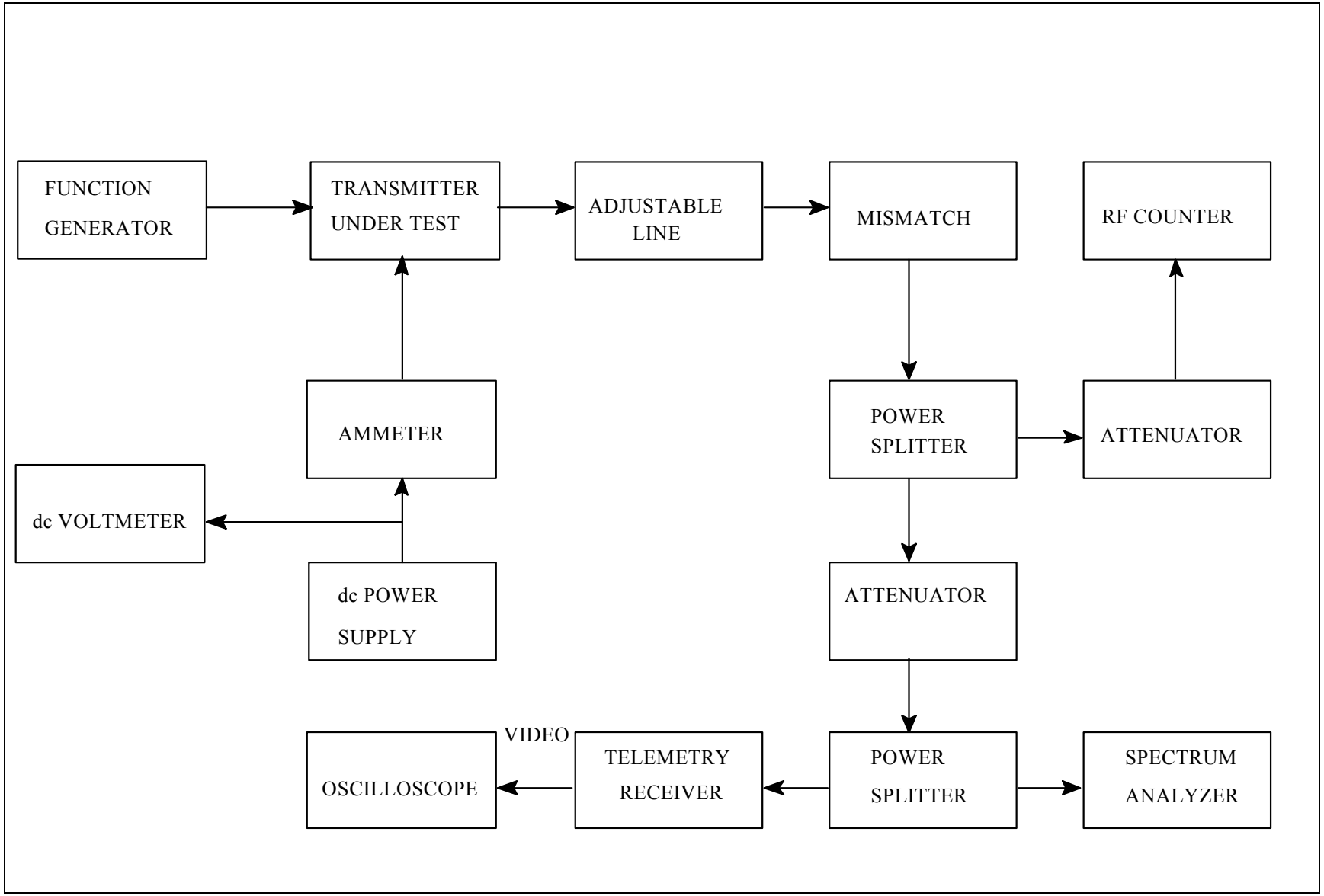

Figure 5-12. Modulation frequency response test using Bessel sideband ratios.

DATA SHEET 5.9.2 TELEMETRY TRANSMITTERS

Test 5.9: Modulation Frequency Response (Bessel Function Method)

Manufacturer _____ Model _____Serial No. _____

Test Personnel _____Date _____

Transmitter Input _____ volts rms

Test Frequency	J_0 (dBm)	J_1 (dBm)	Modulation Index	Peak Deviation	Frequency Response (dB)
_____	_____	_____	_____	_____	_____
_____	_____	_____	_____	_____	_____
_____	_____	_____	_____	_____	_____

5.10 Spurious Emissions Test

5.10.1 Purpose. The occurrence of unwanted spurious and harmonic emissions from a telemetry transmitter can adversely affect the system that the telemetry system is monitoring or adversely affect systems outside the telemetry transmitter's intended band of operation. It is, therefore, important that these emissions be controlled. This test measures the antenna conducted spurious and harmonic output. Two test methods are presented; the first method is for general use and the second method is for use when a sensitive receiver will be operated in close proximity (an example is an L-band telemetry transmitter and a Global Positioning System (GPS) receiver) and either a preselector is not available or the available preselector does not have the required characteristics. Even though IRIG 106 allows spurious and harmonic levels to be as large as –25 dBm, levels significantly lower than –25 dBm can severely degrade the sensitivity of sensitive receiving systems that are in close proximity to the telemetry transmitter.

5.10.2 Test Equipment. See paragraph 5.1.1.

5.10.3 Test Method 1.

5.10.3.1 Setup. Connect test equipment as shown on Figure 5-13.

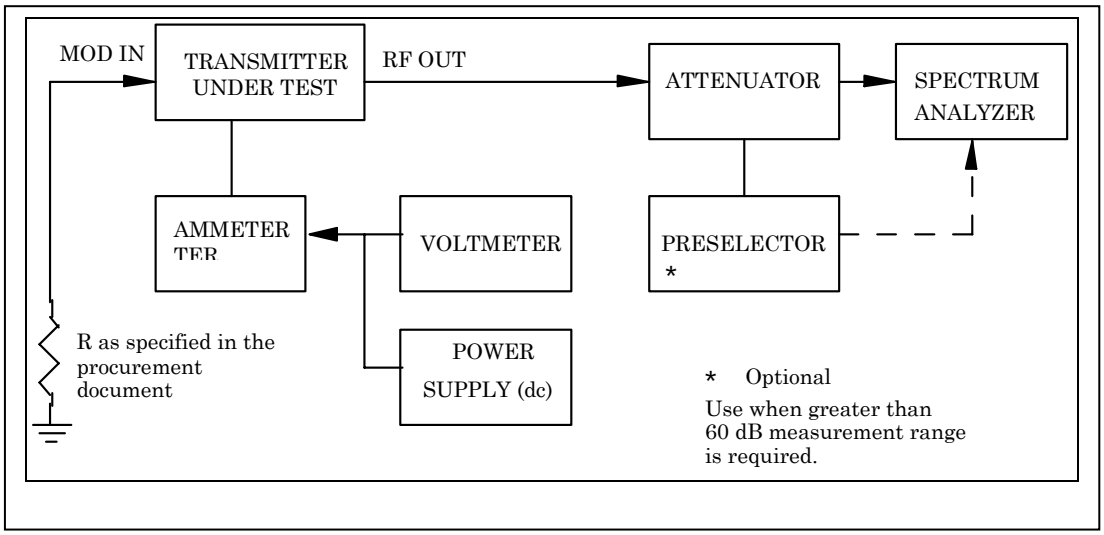

Figure 5-13. Antenna conducted spurious and harmonic output test.

5.10.3.2 Conditions. Use conditions described in subparagraph 5.2.3.2.

NOTE

The requirements of MIL-STD-461, which are specified in the transmitter procurement document, shall also be verified by the applicable tests of MIL-STD-461.

5.10.3.3 Procedure.

5.10.3.3.1 Set up spectrum analyzer as described in the most recent edition of MIL-STD-461. Tune the spectrum analyzer to display the fundamental frequency and adjust the spectrum analyzer display such that the signal is at the top of the display.

5.10.3.3.2 Slowly scan over the required frequency range while monitoring the scope display for spurious signals above the maximum power level specified in the transmitter procurement document. Record the frequency and level of such signals on Data Sheet 5.10.1.

NOTE

IRIG document 106, *Telemetry Standards*, limits the maximum power level of all conducted spurious and harmonic output to –25 dBm.

5.10.4 Test Method 2.

5.10.4.1 Setup. Connect test equipment as shown in Figure 5-13a. The band-pass filter (BPF) should be centered around the frequency band of interest and must have adequate attenuation at the transmitter main frequency (70 dB minimum is a typical requirement) and the preamplifier must have sufficient gain to minimize the effects of the spectrum analyzer's high noise figure (30 dB minimum is a typical requirement). The BPF loss, the cable losses, and the preamplifier gain should be known in the frequency band of interest.

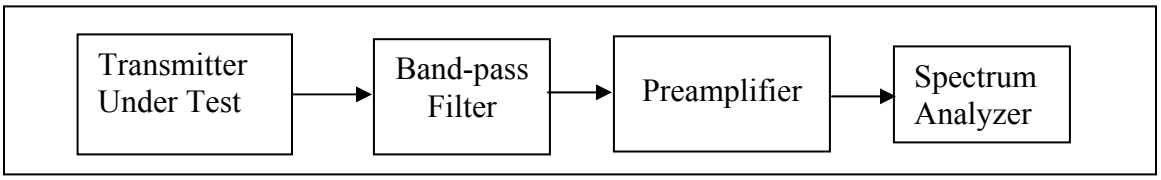

Figure 5-13a. Test setup for measuring low-level spurious signals at the transmitter output.

5.10.4.2 Conditions. Use conditions described in subparagraph 5.2.3.2.

5.10.4.3 Procedure. Set the spectrum analyzer sweep to include both the transmitter frequency and the frequency band of interest (for example, GPS L1 (1575.42 MHz)). The measured power level of the transmitter should be no more than 60 dB above the noise level in the frequency band of interest. Set the spectrum analyzer input attenuation to the minimum value that does not put the analyzer in a non-linear mode (for example, if indicated level is –39 dBm with both 0-dB and 10-dB attenuation, then use 0-dB attenuation). Record the spurious noise level in the frequency band of interest and the level of any discrete spurious signals. Correct for the cable losses, band-pass filter loss, and preamplifier gain to get the power level at the transmitter output and record on Data Sheet 5.10.1.

DATA SHEET 5.10.1 TELEMETRY TRANSMITTERS

Test 5.10: Spurious Emissions

Manufacturer _____ Model _____ Serial No. _____

Test Personnel _____ Date _____

Antenna Conducted Spurious and Harmonic Output Test (using spectrum analyzer):

Search made from _____ MHz to _____ GHz

Channel No. or Frequency _____

Cable loss _____ dB Attenuation _____ dB

Band-pass filter loss _____ dB Preamplifier gain _____ dB

Spectrum analyzer resolution bandwidth _____ kHz

Frequency (MHz)	Spectrum Analyzer Display (dBm)	Spurious Signal at Transmitter Output (dBm)	Spectrum Limit
_____	_____	_____	As specified in procurement document
_____	_____	_____	
_____	_____	_____	
_____	_____	_____	
_____	_____	_____	
_____	_____	_____	
_____	_____	_____	
_____	_____	_____	
_____	_____	_____	
_____	_____	_____	

The power levels of noise-like spurious signals can be corrected for typical detector errors by adding 2.5 dB to the measured values.

5.11 Primary Power Voltage and Low Voltage Recovery Test

5.11.1 Purpose. This test measures the RF output and center frequency at the limits of the primary power voltage range to ensure that the transmitter will operate as specified at the voltage limits. The test also verifies proper operation after recovery from the application of a voltage at 50 percent of the minimum specified value to simulate a temporary variation in the input voltage.

5.11.2 Test Equipment. See paragraph 5.1.1.

5.11.3 Test Method.

5.11.3.1 Setup. Connect test equipment as shown on Figure 5-14.

5.11.3.2 Conditions. Use conditions described in subparagraph 5.2.3.2 where applicable.

5.11.3.3 Procedure.

5.11.3.3.1 Set the primary voltage at the lowest value specified in the transmitter procurement document for 3 minutes and measure the RF output power and center frequency.

5.11.3.3.2 Increase the primary voltage to the highest value specified in the transmitter procurement document for 3 minutes and again measure RF output power and center frequency.

5.11.3.3.3 Lower the primary voltage to 50 percent of the lowest value specified in the procurement document and maintain for 3 minutes.

5.11.3.3.4 Restore voltage within the limits specified in the Standard Test Conditions and measure the RF output power and carrier frequency.

5.11.4 Data Reduction. Record data on Data Sheet 5.11.1.

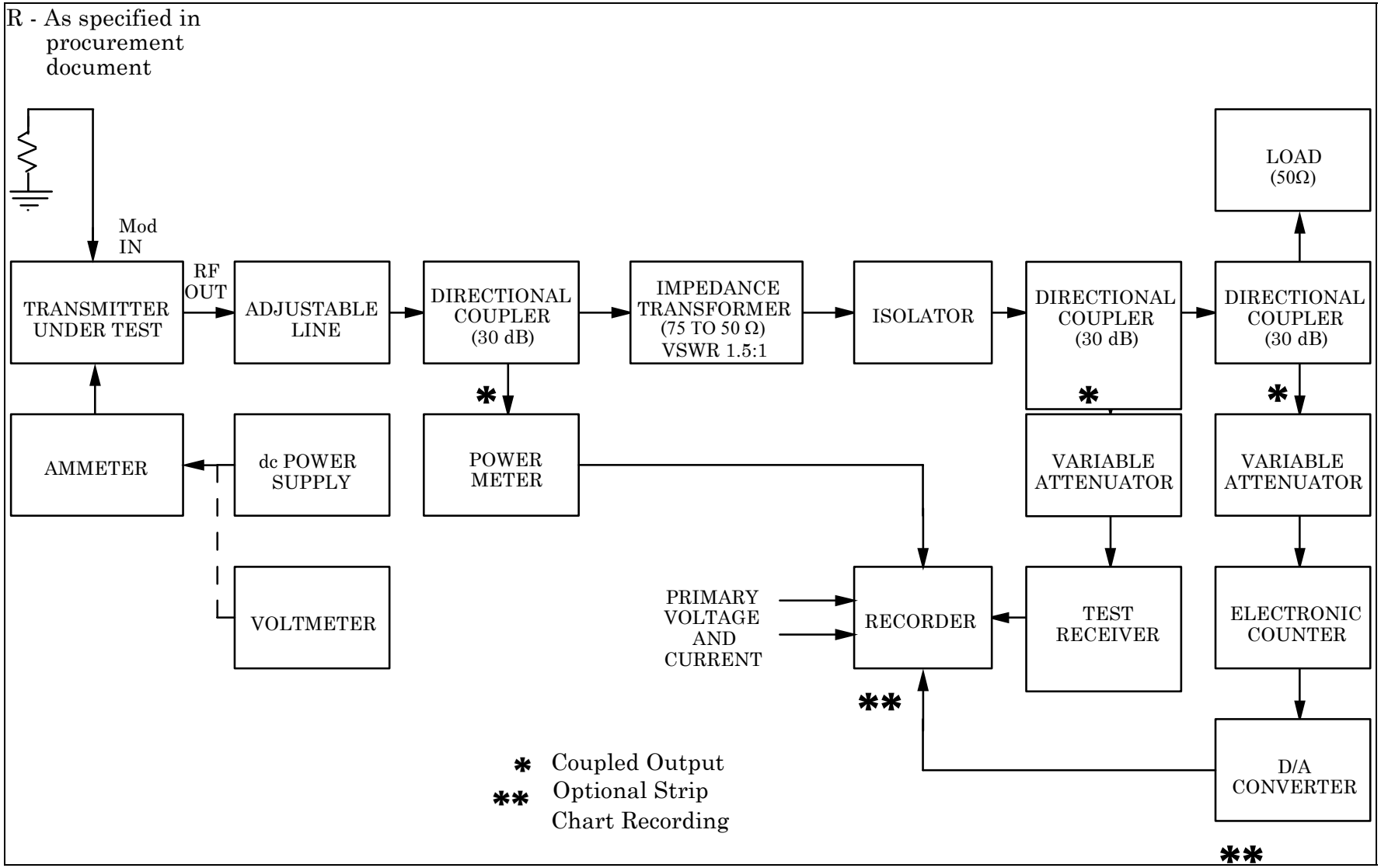

Figure 5-14. Primary power voltage variation test.

DATA SHEET 5.11.1 TELEMETRY TRANSMITTERS

Test 5.11: Primary Power Voltage Low Voltage Recovery

Manufacturer _____ Model _____ Serial No. _____

Test Personnel _____ Date _____

	RF Output Power	Center Frequency
Lowest Specified Voltage	_____	_____
Highest Specified Voltage	_____	_____
After Under-voltage Test	_____	_____
Limits:	As specified in procurement document	As specified in procurement document

5.12 Primary Power Reversal Test

5.12.1 Purpose. The application of reverse voltage during testing and installation can damage a telemetry transmitter if it is not properly protected. This test determines damage, RF power output change, and center frequency change caused by reversal of the primary power inputs.

CAUTION

To prevent damage to the transmitter, do not run this test unless reverse voltage protection was specified in the transmitter procurement document.

5.12.2 Test Equipment. See subparagraph 5.1-2.

5.12.3 Test Method.

5.12.3.1 Setup. Connect test equipment as shown on Figure 5-15.

5.12.3.2 Conditions. Use conditions described in subparagraph 5.2.3.2 where applicable.

5.12.3.3 Procedure.

5.12.3.3.1 Transpose the transmitter primary power leads.

5.12.3.3.2 Apply primary power for at least 3 minutes.

5.12.3.3.3 Return the power leads to the original connections.

5.12.3.3.4 Apply primary power to the transmitter and measure RF output power and center frequency. Record the results on Data Sheet 5.12.1. The reversal of primary power should have caused no damage to the transmitter.

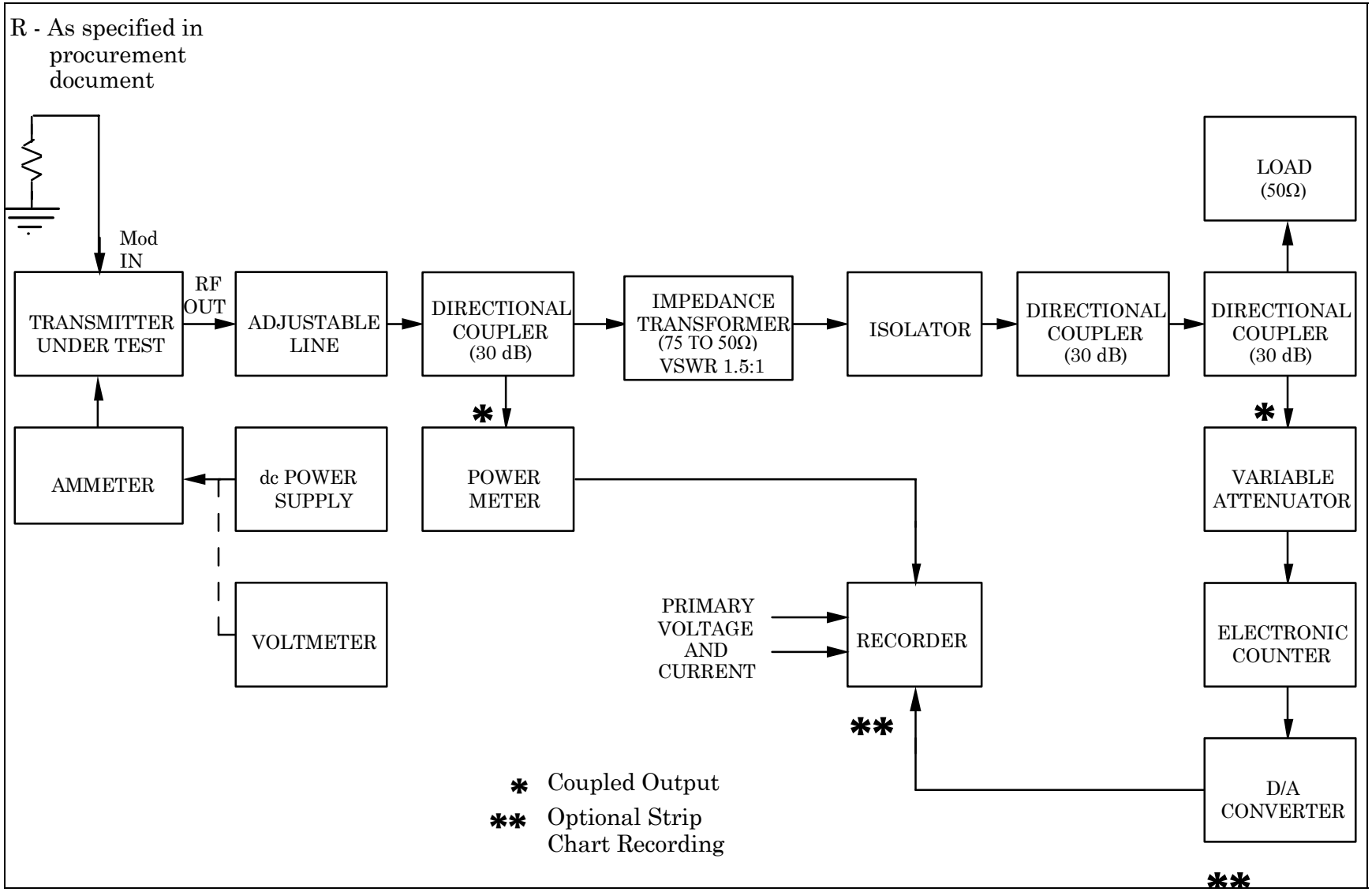

Figure 5-15. Power reversal test.

DATA SHEET 5.12.1 TELEMETRY TRANSMITTERS

Test 5.12: Primary Power Reversal

Manufacturer _____ Model _____ Serial No. _____

Test Personnel _____ Date _____

RF Output Power _____ watts Limits: As specified in transmitter procurement document

Center Frequency _____ MHz

5.13 Stability with Temperature and Power Variations Test

5.13.1 Purpose. The transmitter should meet specification requirements during variations in environment while in use. If the transmitter's operation is adversely affected by specified temperature or power variations, the quality of received data may be unacceptable. This test measures the stability of the transmitter during temperature and primary power variations.

5.13.2 Test Equipment. See paragraph 5.1.1.

5.13.3 Test Method.

5.13.3.1 Setup. Connect test equipment as shown on Figure 5-16.

5.13.3.2 Conditions. Use conditions described in subparagraph 5.2.3.2 with temperature and voltage variations shown on Figure 5-17.

5.13.3.3 Procedure.

5.13.3.3.1 Precondition the transmitter (non-operating) at the lower temperature limit for a period of at least 30 minutes.

5.13.3.3.2 Apply primary power to the transmitter following the preconditioning period.

5.13.3.3.3 Measure the RF output power, center frequency, primary input power, incidental FM, and spurious emissions after the application of primary power.

5.13.3.3.4 Continue measurements while cycling the primary voltage and temperature as shown on Figure 5-17.

5.13.3.3.5 Conduct a second test cycle with the transmitter modulated and with the transmitter deviation and modulation frequency specified in the transmitter detail specification.

5.13.3.3.6 During the second cycle, measure all characteristics listed in subparagraph 5.13.3.3.3 except incidental FM.

5.13.3.3.7 In addition to the measurements listed in subparagraph 5.13.3.3.6, measure the modulation sensitivity every 60 seconds after application of primary power during the second test cycle.

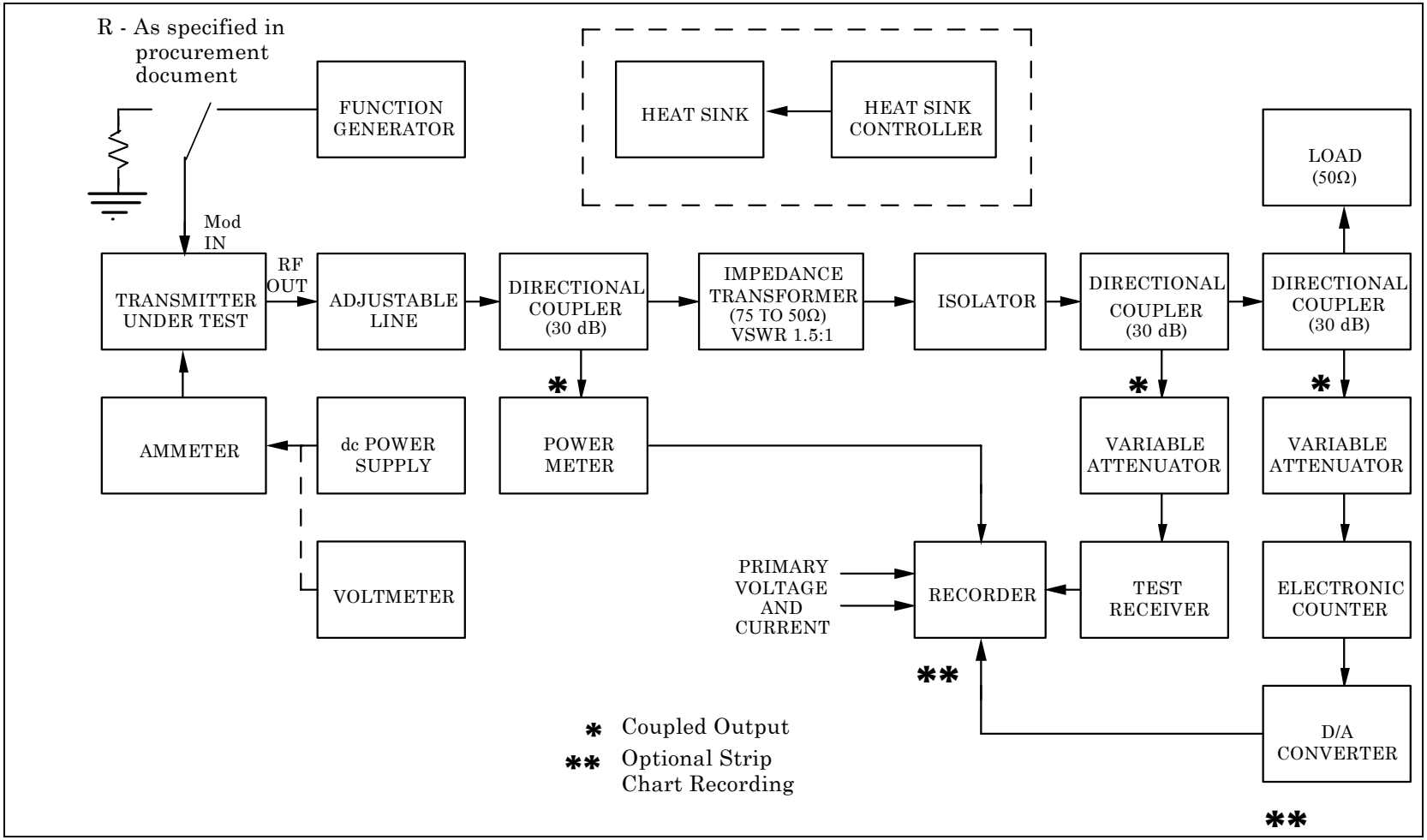

Figure 5-16. Temperature stability tests.

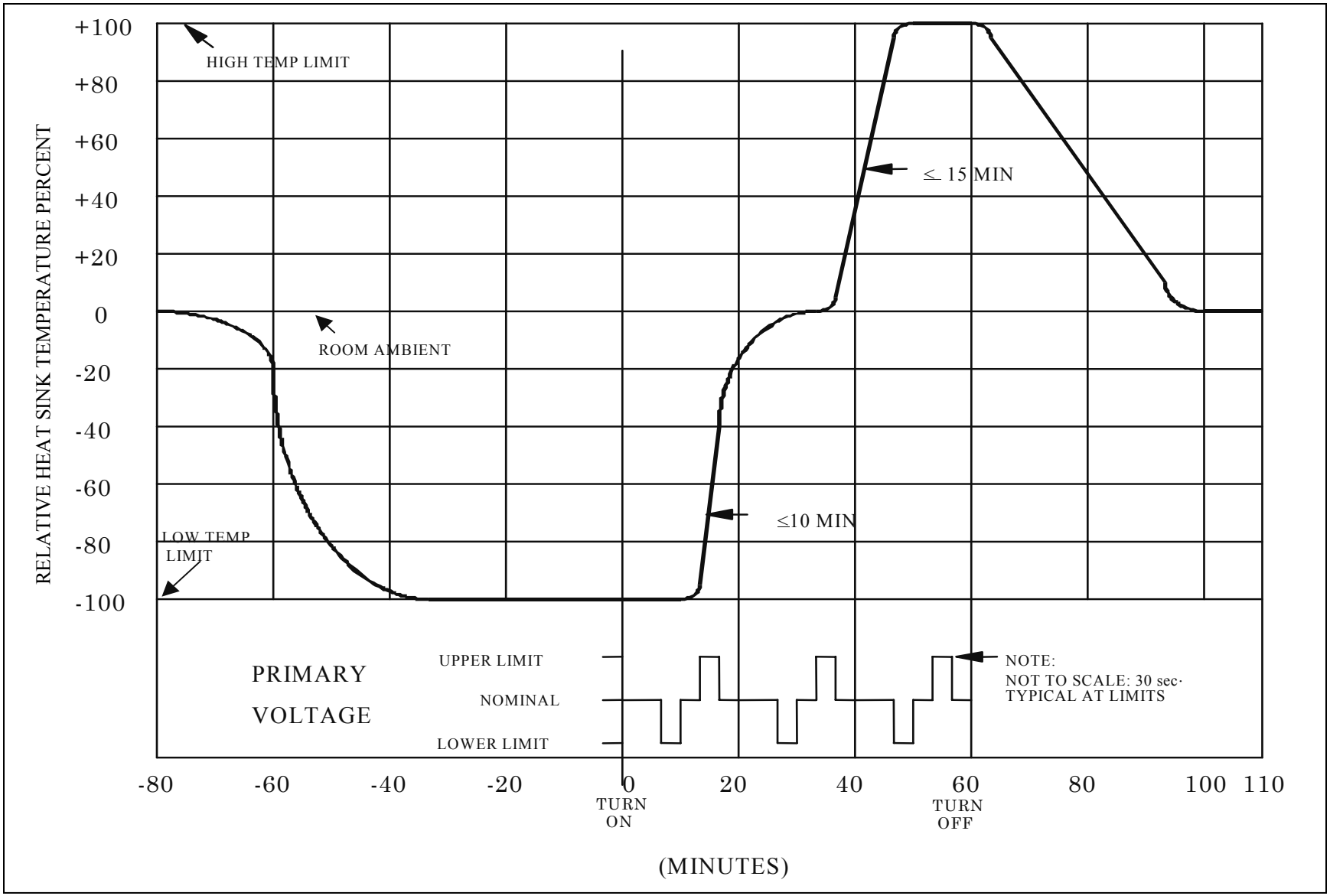

Figure 5-17. Temperature test conditions.

DATA SHEET 5.13.1 TELEMETRY TRANSMITTERS

Test 5.13: Stability with Temperature and Power Variations*

Manufacturer _____Model _____ Serial No._____

Test Personnel _____ Date _____

	First Cycle		Second Cycle	
RF Output Power	_____	watts	_____	watts
Center Frequency	_____	MHz	_____	MHz
Primary Input Power	_____	watts	_____	watts
Incidental FM	_____	kHz		
Modulation Sensitivity			_____	kHz/volt
Spurious Emissions greater than –25 dBm	_____	kHz	_____	dBm
	_____		_____	
	_____		_____	
	_____		_____	
	_____		_____	
	_____		_____	

NOTE

If above characteristics are monitored on a strip chart, note the values that vary the most from the center of the specified range for any given characteristic.

*Limits: As specified in procurement document

5.14 Ground Isolation Test

5.14.1 Purpose. This test measures the resistance between each of the primary power terminals and case ground. The ground isolation at the telemetry transmitter should be specified to meet the requirements of the telemetry system design. The lack of a proper grounding scheme at the system level will typically cause noise that affects data quality and overall system performance.

5.14.2 Test Equipment. See paragraph 5.1.1.

5.14.3 Test Method.

5.14.3.1 Setup. Connect test equipment as shown on Figure 5-18.

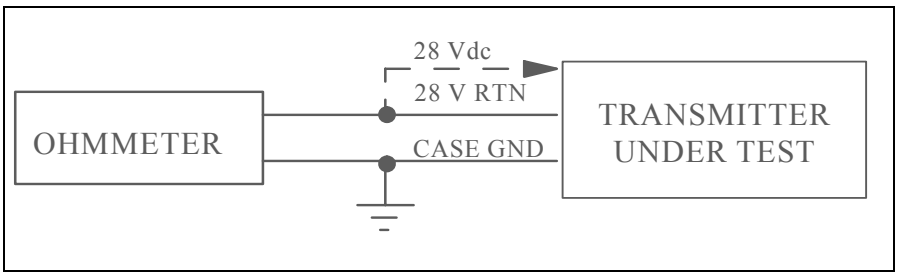

Figure 5-18. Ground isolation test.

5.14.3.2 Conditions. Use conditions described in subparagraph 5.2.3.2 where applicable.

5.14.3.3 Procedure. With the transmitter off, measure the resistance between each of the primary power input terminals and case ground. Record data on Data Sheet 5.14.1.

DATA SHEET 5.14.1 TELEMETRY TRANSMITTERS

Test 5.14: Ground Isolation

Manufacturer _____ Model _____ Serial No. _____

Test Personnel _____ Date _____

Positive Terminal-to-Case Ground	Negative Terminal-to-Case Ground	Requirement
_____ Megohms	_____ Megohms	As specified in procurement document

5.15 Primary Power Ripple Test

5.15.1 Purpose. Telemetry systems typically operate in an environment where unwanted frequency components are present on the dc power leads to the telemetry transmitter. If the transmitter produces incidental AM and incidental FM components as a result of power line noise, the received data quality will be adversely affected. This test measures incidental AM and incidental FM with a signal superimposed on the primary power leads.

5.15.2 Test Equipment. See MIL-STD-461.

5.15.3 Test Method.

5.15.3.1 Setup. See MIL-STD-461

5.15.3.2 Conditions. See MIL-STD-461.

5.15.3.3 Procedure. Perform the conducted susceptibility test specified by method CS101 of MIL-STD-461. Superimpose signals upon power leads in accordance with the limit for CS101, as specified, and measure the incidental AM and FM of the transmitter. Record results on Data Sheet 5.15.1.

NOTE Instantaneous primary voltage shall not exceed specified limits.

DATA SHEET 5.15.1 TELEMETRY TRANSMITTERS

Test 5.15: Primary Power Ripple

Manufacturer _____ Model _____ Serial No. _____

Test Personnel _____ Date _____

Incidental FM	_____ kHz	Requirement As specified in procurement document.

Incidental AM (peak-peak) _____ % of carrier peak-peak amplitude

5.16 Incidental Frequency Modulation Test

5.16.1 Purpose. The incidental frequency modulation (IFM) components created within the transmitter may cause distortion that will degrade telemetry data and yield unacceptable data quality at the receiver. This test measures the IFM at the transmitter RF output.

> **NOTE**
>
> The IFM is defined as the carrier deviation produced by frequency modulation when the modulating signals are unwanted and internal to the RF signal source. The IFM may be specified and measured either as peak deviation or as rms deviation. Traditionally, peak has been specified; however, IFM has random amplitude fluctuations and thus can be more accurately measured as rms.
>
> Both methods of measurement are described in this procedure. Reference only one method in a procurement document.
>
> The receiver functions as a frequency-to-voltage converter. If desired, the receiver may be assembled using a stable oscillator, double balanced mixer, and frequency demodulator. Receiver local oscillator instability produces measurement system IFM.
>
> The RF generator may be any stable RF source that can be frequency modulated.

5.16.2 Test Equipment. See paragraph 5.1.1. Use peak or rms voltmeter at test receiver output.

5.16.3 Test Method.

5.16.3.1 Setup. Connect test equipment as shown on Figures 5-19 and 5-20.

5.16.3.2 Conditions. Use conditions described in subparagraph 5.2.3.2.

5.16.3.3 Procedure.

5.16.3.3.1 Calibration Procedure.

5.16.3.3.1.1 Setup equipment as shown on Figure 5-19.

5.16.3.3.1.2 Using the RF frequency counter, tune the RF signal generator, in continuous wave mode, to the frequency of the transmitter to be tested. Adjust the spectrum analyzer and receiver to be centered on this continuous wave carrier.

5.16.3.3.1.3 Set the receiver video bandwidth as specified in the procurement document.

5.16.3.3.1.4 Set the receiver IF bandwidth equal to or greater than twice the video bandwidth.

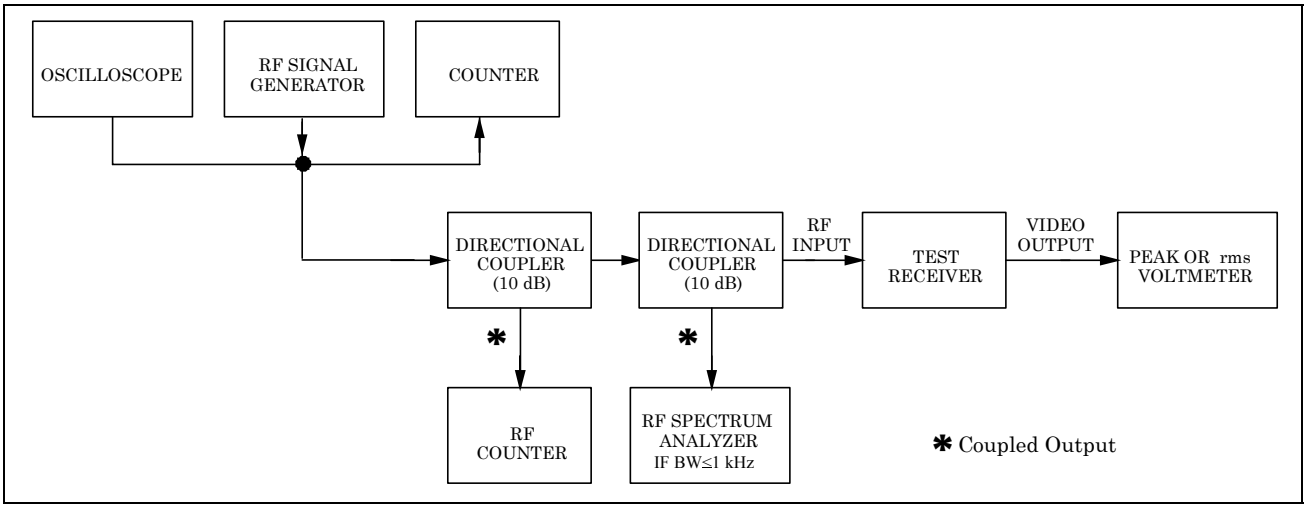

Figure 5-19. Incidental frequency modulation calibration test.

5.16.3.3.1.5 Frequency modulate the RF signal generator with a sine wave whose frequency is (4160±10) Hz (for peak deviation calibration) or (5880±10) Hz (for rms deviation calibration).

5.16.3.3.1.6 Ensure that the receiver is centered on the RF signal.

5.16.3.3.1.7 Increase the amplitude of the modulating signal until the first carrier null is observed on the spectrum analyzer. The resulting carrier deviation is either 10 kHz peak or 10 kHz rms depending on the modulating frequency.

NOTE

This procedure with a 4160 Hz modulating frequency produces a 10 kHz peak deviation that is equivalent to ±10 kHz deviation or 20 kHz peak-to-peak deviation. Using the same procedure with a 5880 Hz modulating frequency produces a 14.14 kHz peak deviation that is equivalent to a 10 kHz rms deviation.

5.16.3.3.1.8 Adjust the receiver video output for a convenient voltage on the peak or rms voltmeter.

5.16.3.3.1.9 Measure and record the receiver video output voltage for the demodulator calibration on Data Sheet 5.16.1.

5.16.3.3.1.10 Calculate and record the receiver demodulator sensitivity on Data Sheet 5.16.1 using the following formula:

$$\text{Demodulator sensitivity (kHz/v)} = 10 \text{ kHz/video output voltage.} \qquad (5\text{-}9)$$

NOTE

The receiver demodulator sensitivity is now calibrated in either kHz peak/volts peak or kHz rms/volts rms. Do not adjust any receiver IF or video controls during tests.

5.16.3.3.1.11 Remove the modulating signal from the signal generator.

5.16.3.3.1.12 Measure and record the receiver video output voltage for the measurement system IFM on Data Sheet 5.16.1.

5.16.3.3.1.13 Calculate and record the measurement system IFM on Data Sheet 5.16.1 using the following formula:

System IFM (kHz) = (video output voltage) (demodulator sensitivity) (5-10)

5.16.3.3.2 Measurement Procedure.

5.16.3.3.2.1 Setup equipment as shown on Figure 5-20.

5.16.3.3.2.2 Record data on Data Sheet 5.16.1

5.16.3.3.2.3 Measure and record the receiver video output voltage.

5.16.3.4 Data Reduction. Calculate and record the composite IFM using the following:

Composite IFM (kHz) = (video output voltage) (demodulator sensitivity) (5-11)

NOTE

The composite IFM includes both transmitter IFM and system IFM. Transmitter IFM is approximately equal to composite IFM if system IFM is much less than composite IFM. The transmitter rms IFM can be calculated using transmitter IFM equals

$$\sqrt{[(composite\ \ IFM)^2 - (system\ \ IFM)^2]}\ \text{(kHz rms deviation)}$$

A general equation for calculating transmitter peak IFM from composite peak IFM does not exist since composite peak IFM is a function of the individual probability density functions of each IFM signal and the method of peak detection; however, transmitter peak IFM will always be less than composite peak IFM. Therefore, assuming transmitter peak IFM to be equal to composite peak IFM will give a conservative estimate of transmitter peak IFM.

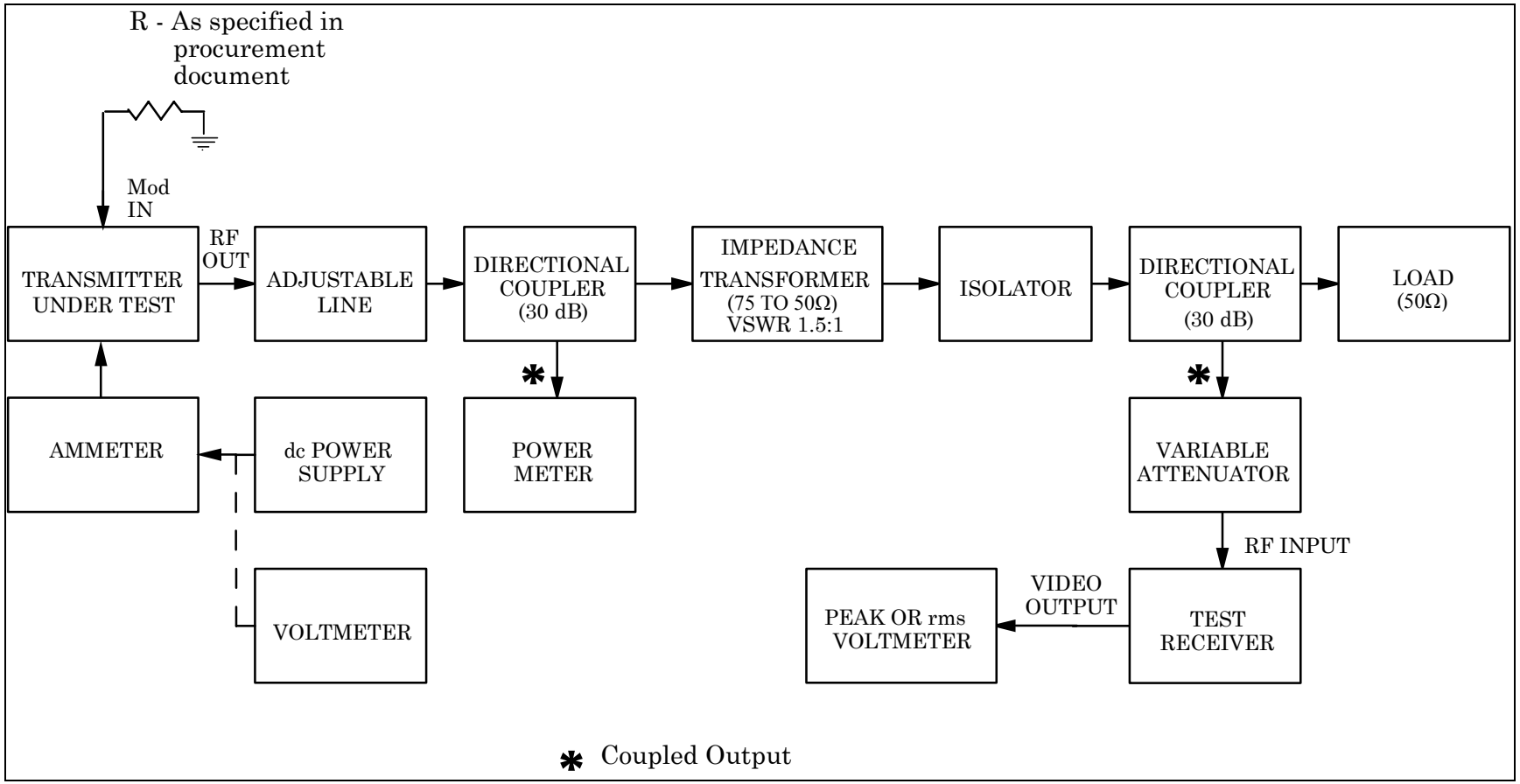

Figure 5-20. Incidental frequency modulation test.

DATA SHEET 5.16.1 TELEMETRY TRANSMITTERS

Test 5.16: Incidental Frequency Modulation

Manufacturer _____ Model _____ Serial No. _____

Test Personnel _____ Date _____

	Receiver Video Output (volts)	IFM (kHz)	Demodulator Sensitivity (kHz*/volt*)	Limits (kHz*)
Demodulator Calibration	_____		_____	
Measurement System IFM	_____	_____		
Composite IFM	_____	_____		
Transmitter IFM	_____	_____		As specified in procurement document

*rms or peak, as specified in procurement document

5.17 Pulse Response Characteristics Test

5.17.1 Purpose. This test determines the pulse response characteristics of the transmitter under test. In this test, the transmitter is modulated with a square wave. The rise time, overshoot, and droop are then measured at the output of a telemetry receiver. The rise time, overshoot and droop characteristics are important for pulse code modulation (PCM) and pulse amplitude modulation (PAM) applications.

5.17.2 Test Equipment. See paragraph 5.1.1.

5.17.3 Test Method.

5.17.3.1 Setup. Connect test equipment as shown on Figure 5-21.

5.17.3.2 Conditions. Use test conditions described in subparagraph 5.2.3.2.

5.17.3.3 Procedure.

5.17.3.3.1 Select the measurement frequency for this test by dividing the expected bit rate by 8.

5.17.3.3.2 Set the function generator to produce a square wave with a frequency equal to the measurement frequency calculated above. Set the amplitude of the function generator to produce a peak deviation that is typical of the deviation expected during actual use. (See paragraph 5.8 for determination of modulation sensitivity.)

5.17.3.3.3 Connect the function generator to the frequency modulation input of the transmitter under test. Connect the transmitter radio frequency output to the test receiver (using appropriate attenuators). Tune the receiver to the transmitter center frequency. Select the widest available receiver intermediate frequency and video filters.

5.17.3.3.4 Connect the video output of the receiver to the oscilloscope. Set the time division of the oscilloscope to capture at least one cycle of the square wave.

5.17.3.3.5 Measure the rise time, overshoot, and droop of the waveform for both positive and negative deviations. Record these values on Data Sheet 5.17.1.

5.17.3.4 Data Reduction. Compare measured values to specification.

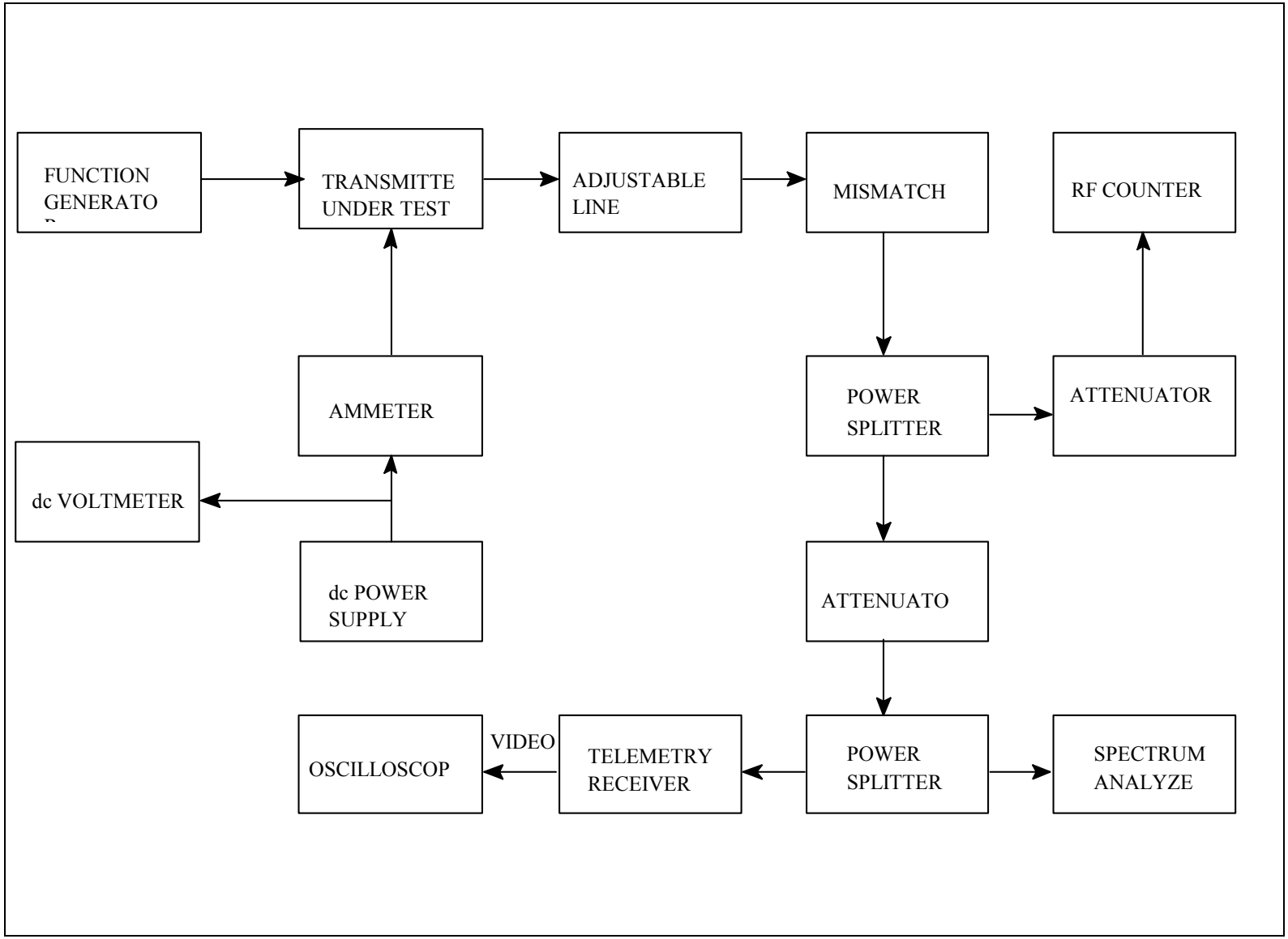

Figure 5-21. Pulse response characteristics test.

DATA SHEET 5.17.1 TELEMETRY TRANSMITTERS

Test 5.17: Pulse Response Characteristics

Manufacturer _____ Model _____ Serial No. _____

Test Personnel _____ Date _____

Modulation test frequency _____ kHz

Peak deviation _____ kHz

Rise time (negative to positive) _____ microseconds

Rise time (positive to negative) _____ microseconds

Overshoot (positive level) _____ percent of full scale

Overshoot (negative level) _____ percent of full scale

Droop (positive level) _____ percent of full scale

Droop (negative level) _____ percent of full scale

5.18 Turn-On and Turn-Off Characteristics Test

5.18.1 Purpose. This test determines the turn-on and turn-off characteristics of the transmitter under test. The video and Automatic Gain Control (AGC) outputs of the test receiver are used to monitor the transmitter frequency and power respectively. An RF spectrum analyzer is used to detect undesired transients. This test can also be used to detect problems caused by slow or rapid power supply voltage slew rates.

5.18.2 Test Equipment. See paragraph 5.1.1. The power supply must be capable of ramping up to (and down from) the desired voltage at the desired rate. The rate is determined by the power characteristics of the application.

5.18.3 Test Method.

5.18.3.1 Setup. Connect test equipment as shown in Figure 5-22.

5.18.3.2 Conditions. Use test conditions described in subparagraph 5.2.3.2. This test should be performed at other temperatures as required.

5.18.3.3 Procedure.

5.18.3.3.1 Connect the RF output of the transmitter to the test receiver using appropriate attenuators. Connect the video and AGC outputs of the receiver and the power supply input to the transmitter to the strip chart recorder or to a digital oscilloscope. Turn the transmitter on and record the video, AGC, and power supply voltages starting shortly before turn on until at least 2 seconds after turn on. The frequency and power variations can be determined by connecting an RF signal generator to the receiver and varying the frequency and power until the previously recorded values are repeated.

5.18.3.3.2 Repeat subparagraph 5.18.3.3.1 while the transmitter is being turned off.

5.18.3.3.3 Connect the RF output of the transmitter to the RF spectrum analyzer. Set the spectrum analyzer span to 200 MHz and center frequency to the transmitter center frequency. Set the detector to peak hold. The resolution and video bandwidths should be set to automatic selection. Start the sweep before the transmitter is turned on and continue sweeping for several seconds after the transmitter is turned on.

5.18.3.3.4 Repeat subparagraph 5.18.3.3.3 while the transmitter is being turned off.

5.18.3.4 Data Reduction. Measure and record on Data Sheet 5.18.1 the time from transmitter turn on until the transmitter stays within the specified frequency tolerance and the time until the transmitter power is always above the minimum specified value. Record any anomalies on Data Sheet 5.18.1. Examples of anomalies include spurious signals, signals which are at other than the intended frequency of operation, and unstable operation at certain input voltages.

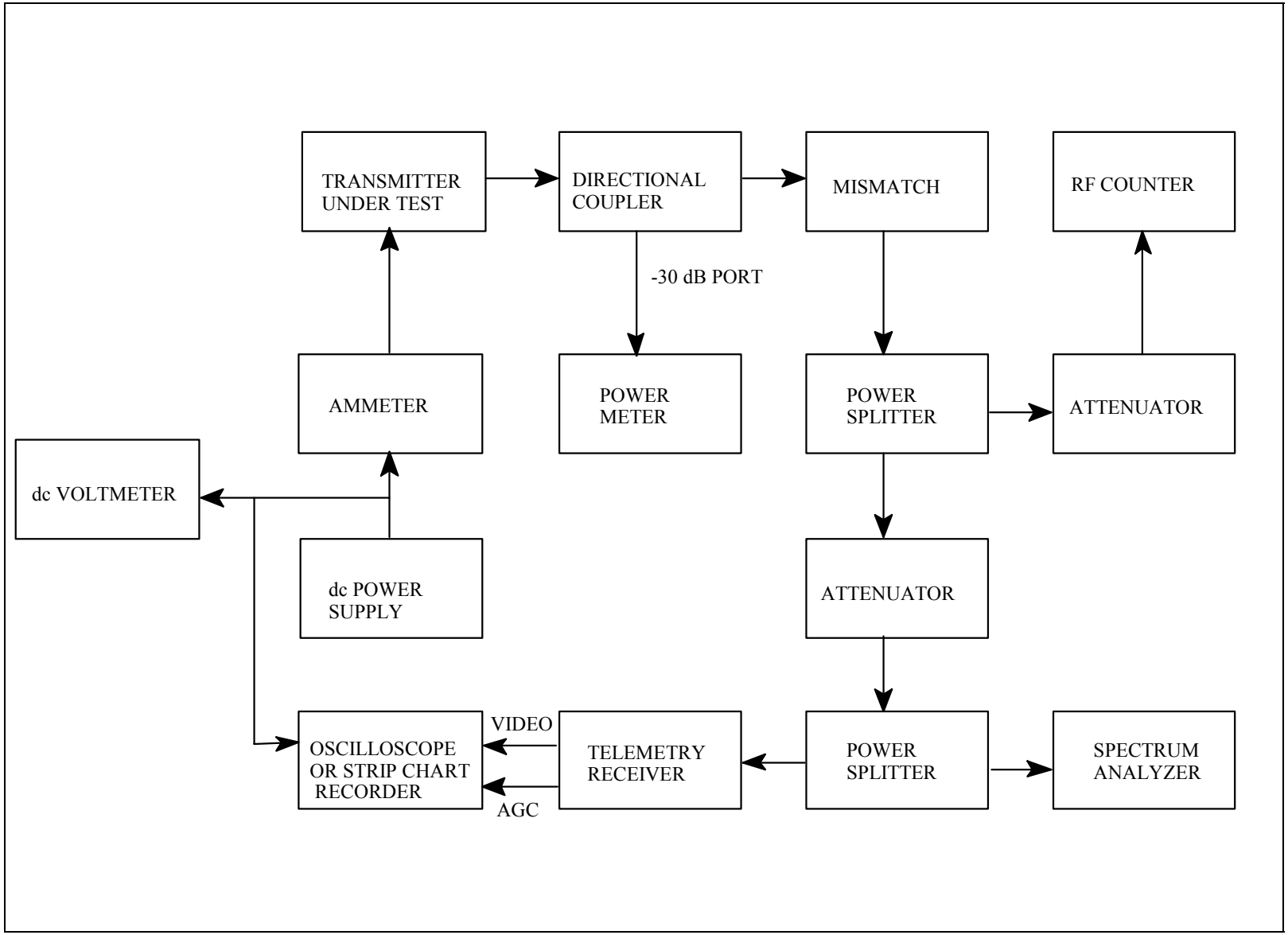

Figure 5-22. Turn-on and turn-off characteristics test.

DATA SHEET 5.18.1 TELEMETRY TRANSMITTERS

Test 5.18: Turn-On and Turn-Off Characteristics

Manufacturer _____ Model _____ Serial No. _____

Test Personnel_____ Date_____ Temperature_____

Specified frequency tolerance _____%

Time until transmitter is within tolerance _____

Specified minimum output power _____watts

Time until transmitter output power is greater than _____ minimum watts

Anomalies

5.19 Two-Tone Intermodulation Test

5.19.1 Purpose. This test determines the ac linearity of a frequency or phase-modulated transmitter using the two-tone intermodulation method. The ac linearity is especially important for FM/FM and hybrid systems because non-linearities will cause spurious signals that can interfere with the desired signals.

5.19.2 Test Equipment. See paragraph 5.1.1.

5.19.3 Test Method.

5.19.3.1 Setup. Connect test equipment as shown on Figure 5-23.

5.19.3.2 Conditions. Use test conditions described in subparagraph 5.2.3.2.

5.19.3.3 Procedure.

5.19.3.3.1 Select two test frequencies (f_1 and f_2) that are typical of the intended use of the transmitter under test. The frequencies are not critical but should be no larger than one-half of the maximum modulation frequency capability of the transmitter under test. The frequency separation should be at least 10 percent of the higher frequency.

5.19.3.3.2 Set the function generator to produce sine waves with frequencies equal to the frequencies selected in subparagraph 5.19.3.3.1. Set the amplitudes of the function generators to equal amplitudes. The amplitudes of the generators should be set to produce total peak deviations (each generator should produce one-half of the total peak deviation) that are typical of the deviations expected during actual use. (See paragraph 5.8 for determination of modulation sensitivity.)

5.19.3.3.3 Sum the generator outputs equally and connect the summed signal to the frequency (or phase) modulation input of the transmitter under test. Connect the transmitter radio frequency output to the test receiver using appropriate attenuators. The receiver's intermediate frequency and video bandwidths should be set to the widest values available.

5.19.3.3.4 Connect the video output of the receiver to the input of the spectrum analyzer. Set the spectrum analyzer to sweep from zero frequency to a frequency equal to five times the highest input frequency.

5.19.3.3.5 Measure the amplitudes (in dBm) of the signals at the two input frequencies, the sum and difference of the two input frequencies, and two times each of the input frequencies plus and minus the other frequency. Record these values on Data Sheet 5.19.1.

5.19.3.4 Data Reduction. Calculate the difference in amplitude between the larger of f_1 and f_2 and each of the other frequencies listed on Data Sheet 5.19.1. Record these values on Data Sheet 5.19.1. Compare these values to the specification.

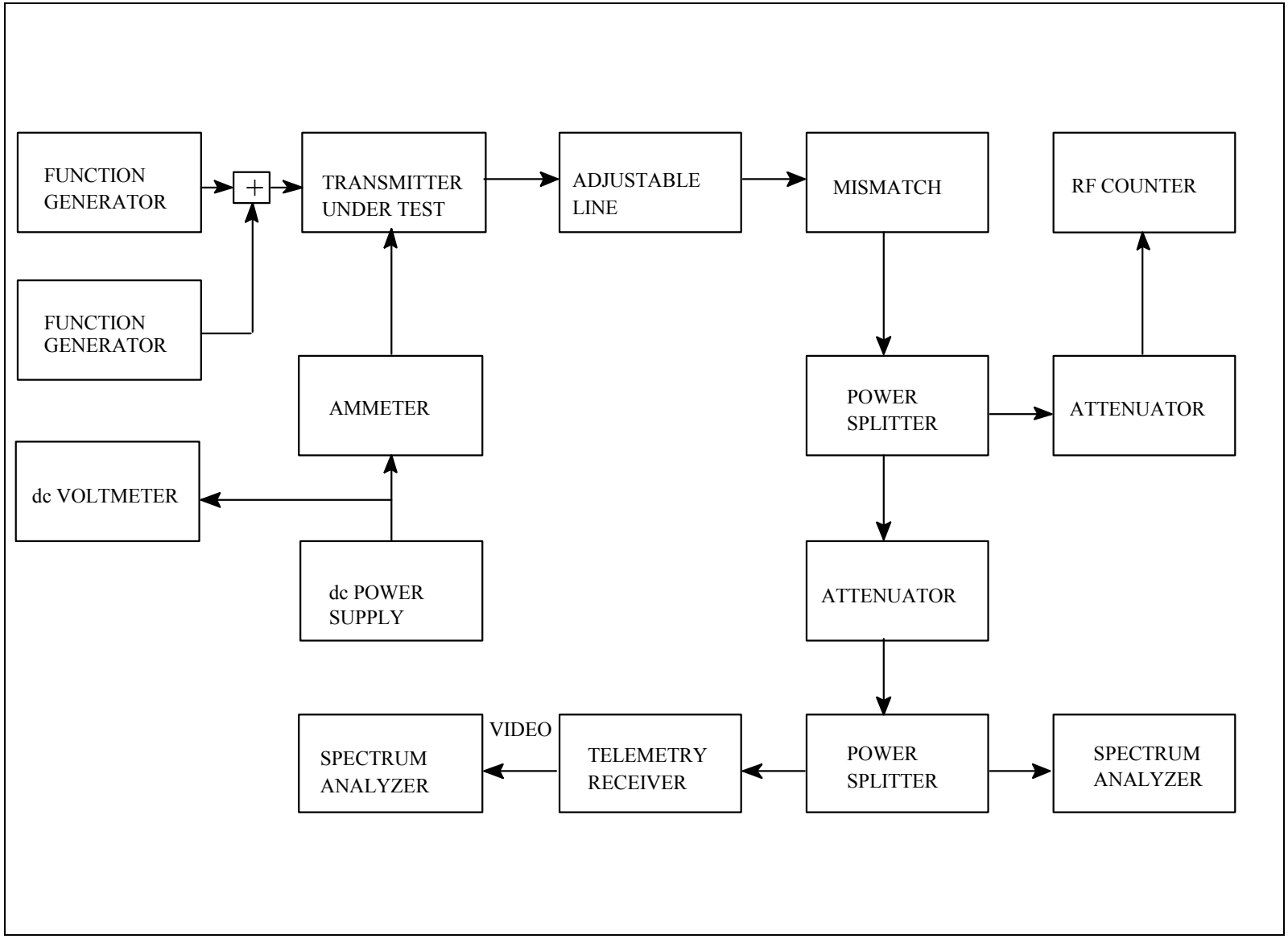

Figure 5-23. Two-tone intermodulation test.

DATA SHEET 5.19.1 TELEMETRY TRANSMITTERS

Test 5.19: Two-Tone Intermodulation

Manufacturer _____ Model _____ Serial No. _____

Test Personnel _____ Date _____

Measurement frequencies:

f_1 _____ kHz

f_2 _____ kHz

Transmitter input

_____ Volts rms (each signal)

Frequency (kHz)	Amplitude (dBm)	Difference (dB)
f_1	_____	_____
f_2	_____	_____
$f_1 - f_2$	_____	_____
$f_1 + f_2$	_____	_____
$2f_1 - f_2$	_____	_____
$2f_1 + f_2$	_____	_____
$2f_2 - f_1$	_____	_____
$2f_2 + f_1$	_____	_____

5.20 Reverse Conversion Test

5.20.1 Purpose. This test determines the levels of the spurious signals that are produced by a telemetry transmitter (frequency = f_1) when an RF signal is applied to its output. The results of this test can be used to predict the levels of the spurious signals that would be produced if two transmitters were operated with a known external isolation between their RF outputs. A telemetry transmitter output circuit can act as a frequency converter that creates a spurious output when a reverse signal at frequency f_2 is applied to the transmitter output. Of primary concern is the conversion product at a frequency of $(2f_1-f_2)$. This conversion product is symmetrically spaced on the opposite side of the transmitter frequency from the interfering signal (f_2). The conversion loss is nearly power independent but does vary somewhat with frequency offset. The method described in this test injects a signal (f_2) into the transmitter output and measures the conversion loss of the signal at a frequency of $(2f_1-f_2)$. Absolute power settings are not critical, but an f_2 level of at least 0 dBm is required to easily view the spurious signal on a spectrum analyzer.

5.20.2 Test Equipment. Directional coupler (20 dB), RF source (may be another transmitter), attenuator, isolators, power meter, and spectrum analyzer. To minimize misinterpretation of low-level spurious signals, a pre-selected spectrum analyzer is recommended.

5.20.3 Test Method.

5.20.3.1 Setup. The attenuator must be set such that the input level to the spectrum analyzer is below the specified damage level. Connect the test equipment as shown on Figure 5-24. The RF source should be connected to the coupled port of the directional coupler. The isolators between the RF source and the directional coupler are oriented to pass the RF source power to the transmitter and to attenuate the level of the transmitter signal that is conducted back to the output of the RF source.

5.20.3.2 Conditions. Use test conditions described in subparagraph 5.2.3.2.

5.20.3.3 Procedure.

5.20.3.3.1 For multi-channel transmitters, first perform the test at the center channel. Select a frequency for the RF source (f_2) that is 5 MHz below the frequency of the transmitter (f_1) under test. Do not connect the transmitter to the directional coupler. Connect the power meter to the input port of the directional coupler and vary the power level of the RF source to achieve a power level of approximately +10 dBm. Record this power level on Data Sheet 5.20.1. The power level can be varied by using an RF signal generator with sufficient output power (approximately +30 dBm), an RF signal generator plus a power amplifier, or a telemetry transmitter plus an attenuator. Disconnect the power meter and connect the input port of the directional coupler to the attenuator and spectrum analyzer. Set the spectrum analyzer center frequency to the transmitter frequency and set the span equal to 10 times (f_1-f_2). Record the spectrum analyzer power reading on Data Sheet 5.20.1. The reading should be approximately

equal to 10 dBm minus the attenuation. Verify that the RF source does not have any spurious output signals.

5.20.3.3.2 Connect the equipment as shown on Figure 5-24 except disconnect the RF source from the directional coupler and terminate this port in 50 ohms. Measure the power level (in dBm) of the signal at the transmitter frequency and the frequencies and power levels of any spurious signals. Record these values on Data Sheet 5.20.1. Connect the RF source to the directional coupler.

5.20.3.3.3 Verify that the spectrum analyzer is not introducing inter-modulation products by increasing the spectrum analyzer's internal attenuator by 10 dB and verifying that the relative levels of the signals remain constant. If the relative levels do not remain constant, increase the spectrum analyzer's internal attenuation until the relative levels remain constant when the attenuation is increased by 10 dB. Record this spectrum analyzer internal attenuation value of Data Sheet 5.20.1 and keep the value fixed for the remainder of the tests.

5.20.3.3.4 Measure the power levels (in dBm) of the signals at the transmitter and RF source frequencies and the frequencies and power levels of any spurious signals. Record these values on Data Sheet 5.20.1.

5.20.3.3.5 Repeat this test for frequency separations of ±5, ±10, ±20, and ±50 MHz. For multi-channel transmitters, repeat this test at the highest and lowest frequencies.

5.20.3.4 Data Reduction. Calculate the difference in power level between the +10 dBm reverse signal at the transmitter output and the spurious signal level at the transmitter output (correct for external attenuator loss). Record these values on Data Sheet 5.19.1. Sample data are shown on the sample data sheet.

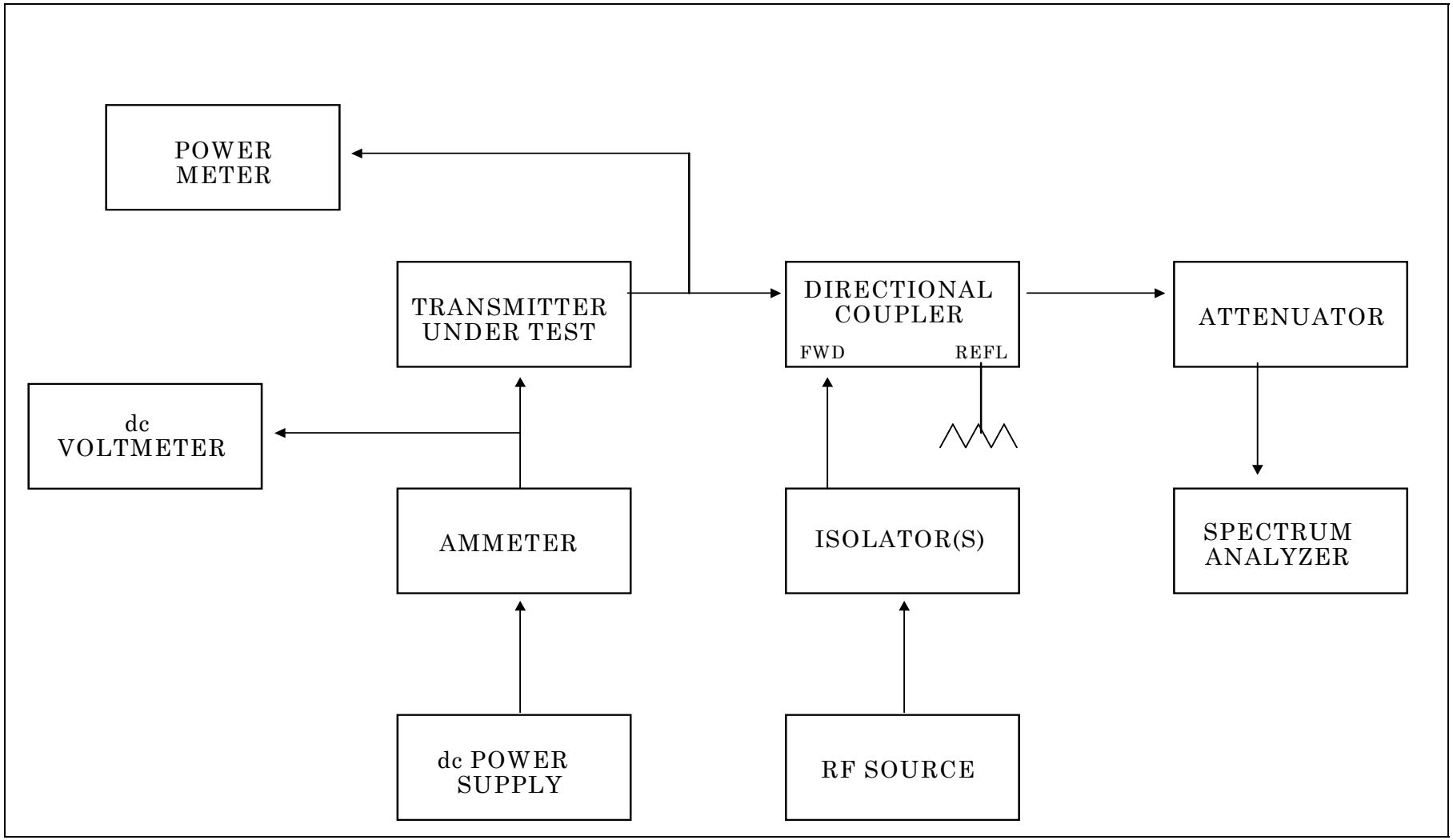

Figure 5-24. Reverse conversion test.

DATA SHEET 5.20.1 TELEMETRY TRANSMITTERS

Test 5.20: Reverse Conversion

Manufacturer _____ Model _____ Serial No. _____

Test Personnel _____ Date _____

RF source power level measured at transmitter input: _____ dBm

RF source power level measured using spectrum analyzer: _____ dBm

Attenuator setting: _____ dB

Spectrum analyzer attenuator setting: _____ dB

	Frequency (MHz)	Power (dBm)
Transmitter only (f_1)	_____	_____
Ambient spurious signals	_____	_____

Transmitter and RF source

f_2 Offset (MHz)	Spurious Offset (MHz)	Spurious Power (dBm)	Conversion Loss (dB)
_____	_____	_____	_____
_____	_____	_____	_____
_____	_____	_____	_____
_____	_____	_____	_____
_____	_____	_____	_____
_____	_____	_____	_____

DATA SHEET 5.20.1 SAMPLE DATA SHEET

Test 5.20: Reverse Conversion

Manufacturer _____ Model _____ Serial No. _____

Test Personnel _____ Date _____

RF source power level measured at transmitter input: 10 dBm

RF source power level measured using spectrum analyzer: –20 dBm

Attenuator setting: 30 dB

Spectrum analyzer attenuator setting: 20 dB

	Frequency (MHz)	Power (dBm)
Transmitter only (f_1)	2250.5	7
Ambient spurious signals	2240.5	–70

Transmitter and RF source

F_2 Offset MHz	Spurious Offset MHz	Spurious Power dBm	Conversion Loss dB
–5	+5	–50	30
+5	–5	–51	31
–10	+10	–52	32
+10	–10	–53	33
–20	+20	–55	35
+20	–20	–55	35

5.21 Center Frequency and Frequency Stability Test (Digital Transmitters)

5.21.1 Purpose. This test measures the center frequency and frequency stability of ac coupled digital transmitters. The center frequency and frequency stability are critical to avoiding interference with adjacent channels and obtaining optimum data quality at the telemetry receiver.

5.21.2 Test Equipment. See paragraph 5.1.1.

5.21.3 Test Method.

5.21.3.1 Setup. Connect test equipment as shown on Figure 5-25.

5.21.3.2 Conditions. Use conditions described in subparagraph 5.2.3.2 where applicable. Measurements should also be made at highest and lowest intended temperatures of operation.

5.21.3.3 Procedure.

5.21.3.3.1 Shorted Input Test (modulation input shorted to ground): Perform the shorted input test as described in the following subparagraphs.

5.21.3.3.1.1 With the modulation input shorted to ground, apply minimum specified Vdc to the transmitter primary power input.

5.21.3.3.1.2 Verify minimum output power requirements for the transmitter under test are met. Measure and record on Data Sheet 5.21.1.

5.21.3.3.1.3 Measure and record the frequency displayed on the counter/printer, beginning at the first 1-second period after turn on and at each 1-second interval through the first 10 seconds. Continue these measurements at each 10-second interval through 30 seconds. At the conclusion of the 30 seconds, continue these measurements at each 5-minute interval through 15 minutes. Record readings on Data Sheet 5.21.1.

5.21.3.3.1.4 Repeat subparagraphs 5.21.3.3.1.1 through 5.21.3.3.1.3, except apply nominal specified Vdc to the transmitter primary power input.

5.21.3.3.1.5 Repeat subparagraphs 5.21.3.3.1.1 through 5.21.3.3.1.3, except apply maximum specified V dc to the transmitter primary power input.

5.21.3.3.1.6 Using the data from the above tests, determine the greatest departure from f_c for both the 1 to 5 second case and the 5 seconds through 15 minutes case.

5.21.3.3.1.7 Record on Data Sheet 5.21.1. Calculate the frequency stability in percent of f_c for each of the conditions. Record on Data Sheet 5.21.1. Verify that the transmitter meets the specified requirements.

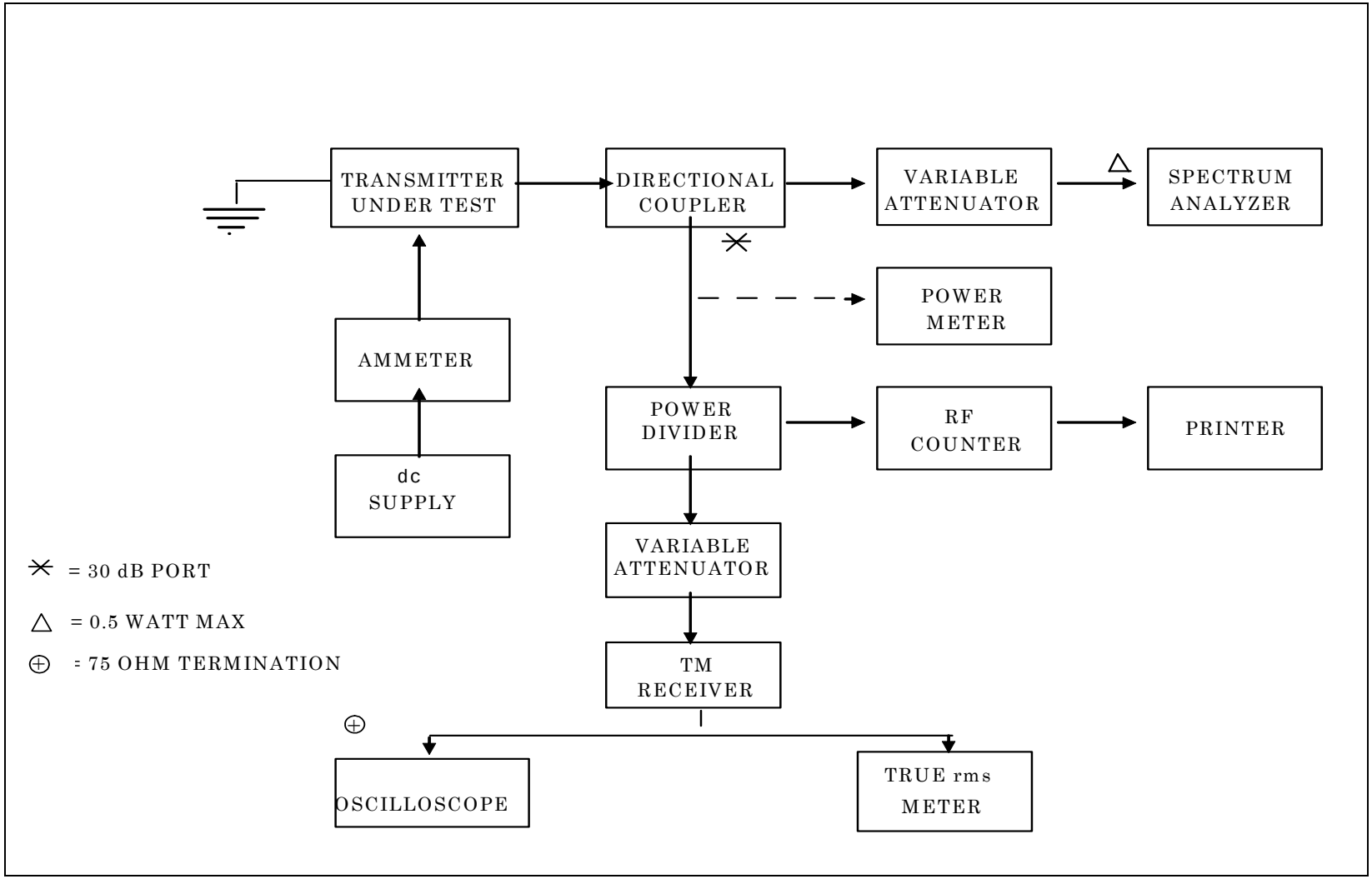

Figure 5-25. Center frequency and frequency stability test setup.

DATA SHEET 5.21.1 TELEMETRY TRANSMITTERS - DIGITAL

Test 5.21: Center Frequency and Frequency Stability

Manufacturer _____ Model _____ Serial No. _____

Test Personnel _____ Date _____

	Primary Power Input		
	Min Vdc	Nom Vdc	Max Vdc
Output Power	_____	_____	_____
Output Frequency (fc)			
1 second	_____	_____	_____
2 seconds	_____	_____	_____
3 seconds	_____	_____	_____
4 seconds	_____	_____	_____
5 seconds	_____	_____	_____
6 seconds	_____	_____	_____
7 seconds	_____	_____	_____
8 seconds	_____	_____	_____
9 seconds	_____	_____	_____
10 seconds	_____	_____	_____
20 seconds	_____	_____	_____
30 seconds	_____	_____	_____
5 minutes	_____	_____	_____
10 minutes	_____	_____	_____
15 minutes	_____	_____	_____

Test 5.21: Center Frequency and Frequency Stability

Manufacturer _____ Model _____ Serial No. _____

Test Personnel _____ Date _____

Greatest departure from fc (Δfc)

1 - 5 seconds	_____	_____	_____
5 seconds - 15 minutes	_____	_____	_____

Frequency Stability (%) *

1 - 5 seconds	_____	_____	_____
5 seconds - 15 minutes	_____	_____	_____

* Frequency Stability = $100 \cdot \Delta fc / fc$ % (5-12)

5.22 Frequency Deviation Test (Digital Transmitters)

5.22.1 Purpose. This test measures the frequency deviation of a digital transmitter. The proper frequency deviation for a given bit rate is necessary to obtain optimum bit error rate performance.

5.22.2 Test Equipment. See paragraph 5.1.1

5.22.3 Test Method.

5.22.3.1 Setup. Connect test equipment as shown on Figure 5-26.

5.22.3.2 Conditions. Use conditions described in subparagraph 5.2.3.2 where applicable.

5.22.3.3 Procedures.

> **NOTE**
>
> This method is recommended for digital transmitters employing a single pole RC premodulation filter and a peak deviation set near 0.375 times the specified bit rate. If a filter of greater than one pole is used the third, fourth, fifth, or sixth null may be used with a corresponding modulation index (β) of 6, 8, 10, or 12 to minimize filter effects.

5.22.3.3.1 Square Wave Bessel Null Method.

5.22.3.3.1.1 Apply primary voltage to the transmitter.

5.22.3.3.1.2 Modulate the transmitter with a 5 V peak-to-peak square wave with a +2.5 Vdc offset voltage at a frequency corresponding to 1/2 the maximum specified bit rate.

5.22.3.3.1.3 Observe the spectral display on the spectrum analyzer.

5.22.3.3.1.4 Slowly reduce the square wave frequency until the carrier goes to NULL a second time, which corresponds to a modulation index (β) of 4.

5.22.3.3.1.5 Measure and record the square wave generator frequency on Data Sheet 5.22.1.

5.22.3.3.1.6 Multiply the frequency in subparagraph 5.22.3.3.1.5 by 4 to determine the peak deviation. Record the peak deviation on Data Sheet 5.22.1.

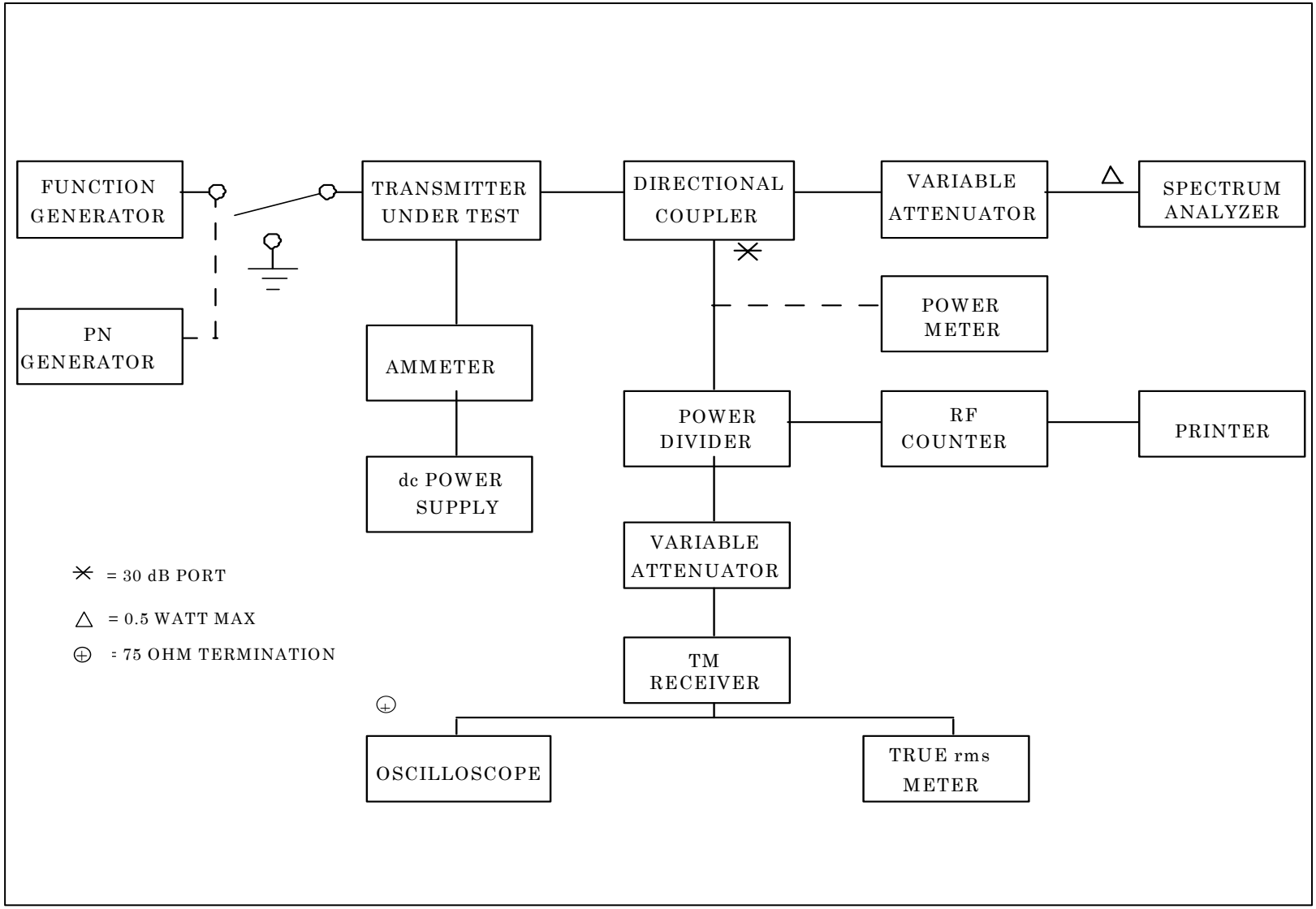

Figure 5-26. Frequency deviation test setup.

5.22.3.3.2 Pseudo-Random Pattern Method.

5.22.3.3.2.1 Set the spectrum analyzer controls as described in the following subparagraphs.

5.22.3.3.2.1.1 Video bandwidth: approximately 1 kHz.

5.22.3.3.2.1.2 Resolution bandwidth: approximately 10 kHz.

5.22.3.3.2.1.3 Span: approximately 4 times the bit rate.

5.22.3.3.2.2 Modulate the transmitter with a 2047 bit pseudo-random noise (PN) non-return-to-zero (NRZ) signal sequence at a bit rate equal to the value specified.

5.22.3.3.2.3 Measure the frequency between the first nulls, null spacing, on either side of the center frequency (see Figure 5-27).

5.22.3.3.2.4 To determine peak deviation, Δf, subtract the null spacing, found in subparagraph 5.22.3.3.2.3, divided by two from the bit rate in subparagraph 5.22.3.3.2.2.

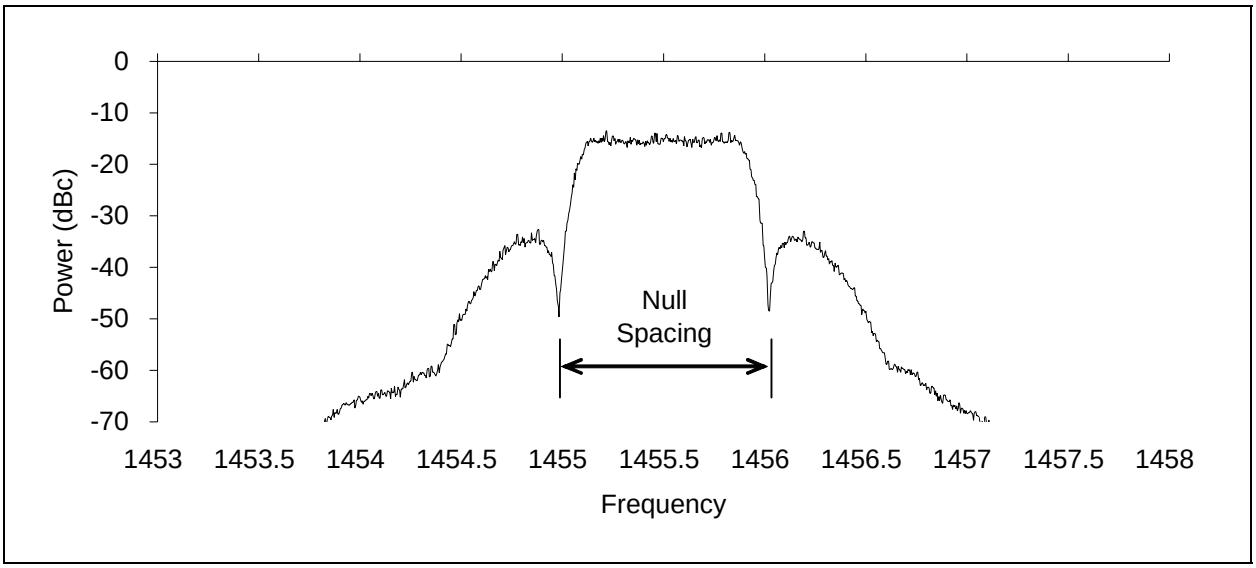

Figure 5-27. Null spacing measurement test.

DATA SHEET 5.22.1 TELEMETRY TRANSMITTERS - DIGITAL

Test 5.22: Frequency Deviation

Manufacturer _____ Model _____ Serial No. _____

Test Personnel _____ Date _____

Square Wave Bessel Null:

Square wave generator frequency at second carrier null _____

Peak deviation _____
(Peak deviation = 4 times square wave generator frequency at second carrier null)

General equation (n^{th} null) = (2) times (n) times (square wave frequency at n^{th} null)

Pseudo-Random Pattern:

Null spacing _____

Peak deviation_____ (Peak deviation = bit rate – (null spacing ÷ 2)

5.23 Deviation Sense and Transition Threshold Test (Digital Transmitters)

5.23.1 Purpose. This test verifies that the transmitter has the proper deviation sense and measures the transition threshold voltage of the digital transmitter. The deviation sense should be as specified in the transmitter procurement document to prevent inversion of the digital data. The transition threshold required is dependent upon the logic device feeding the transmitter and must be matched to specified value in the transmitter procurement document to prevent the loss of or unwanted addition of bit transitions which would result in an increase in the bit error rate for the system.

5.23.2 Test Equipment. See paragraph 5.1.1

5.23.3 Test Method.

5.23.3.1 Setup. Connect test equipment as shown in Figure 5-28.

5.23.3.2 Conditions. Use conditions described in subparagraph 5.2.3.2 where applicable.

5.23.3.3 Procedures.

5.23.3.3.1 Apply nominal Vdc to the transmitter primary power input.

5.23.3.3.2 Apply a 3 kHz triangle waveform with a 4-V peak-to-peak amplitude and a +2 Vdc offset to the modulation input.

5.23.3.3.3 Connect the signal in subparagraph 5.23.3.3.2 above to channel A of the oscilloscope.

5.23.3.3.4 Set the oscilloscope vertical gain to 0.5 V/division.

5.23.3.3.5 Set the oscilloscope timebase as required to display 2-3 cycles of the triangle waveform.

5.23.3.3.6 Set the receiver up as described in the following subparagraphs.

5.23.3.3.6.1 Center frequency: to assigned frequency.

5.23.3.3.6.2 IF bandwidth: ≥ 2 times the specified bit rate.

5.23.3.3.6.3 Video bandwidth: ≥0.7 times the specified bit rate.

5.22.3.3.6.4 Video gain: Set to produce a deflection on channel B of the scope greater than or equal to the amplitude of the triangular waveform on channel A.

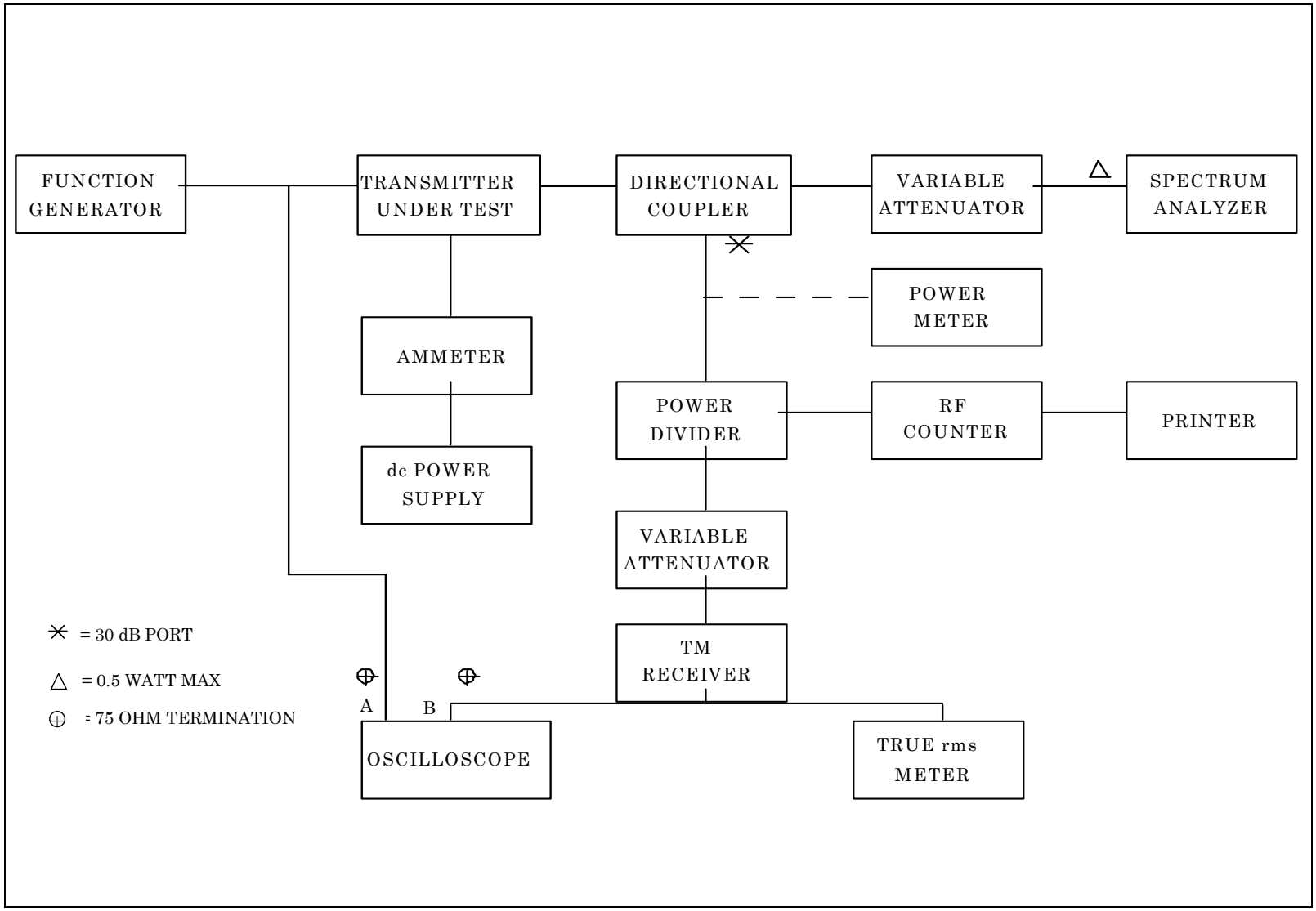

Figure 5-28. Deviation sense and transition threshold test setup

5.23.3.3.6.5 Video output: Noninverting mode.

5.23.3.3.7 Verify that the receiver does not invert the signal.

5.23.3.3.8 Trigger the scope with channel B.

5.23.3.3.9 Measure the threshold voltage (see Figure 5-29) as the input voltage at the time the receiver video output voltage is at 50 percent of its swing.

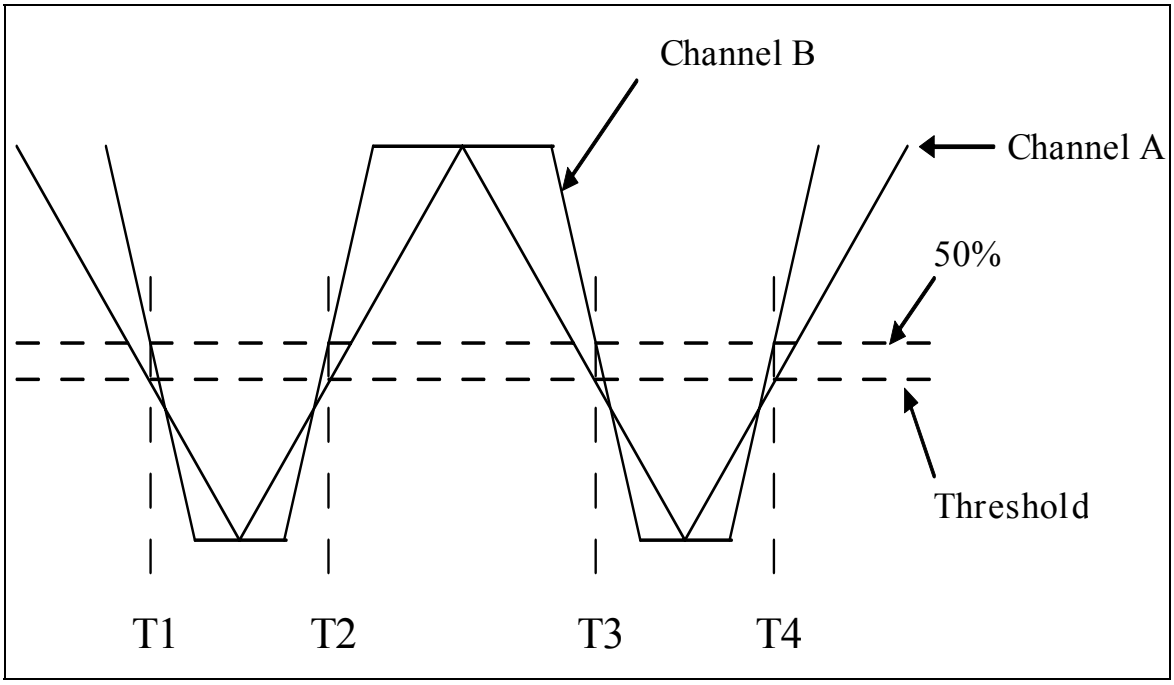

Figure 5-29. Threshold voltage measurement test.

5.23.3.3.10 Record the threshold for both increasing and decreasing input voltage on Data Sheet 5.23.1.

5.23.3.3.11 Deviation sense is measured as described in the following subparagraphs.

5.23.3.3.11.1 Observe the phase of the input signal versus the receiver output.

5.23.3.3.11.2 The deviation sense is POSITIVE when the modulation input signal and the receiver output signal are in phase (see Figure 5-29). The deviation sense is NEGATIVE when the modulation input signal and the receiver output signal are out of phase. Record the deviation sense on Data Sheet 5.23.1.

DATA SHEET 5.23.1 TELEMETRY TRANSMITTERS - DIGITAL

Test 5.23: Deviation Sense and Transition Threshold

Manufacturer _____ Model _____ Serial No. _____

Test Personnel _____ Date _____

Transition threshold for increasing input voltage _____

Transition threshold for decreasing input voltage _____

Deviation sense _____

5.24 Eye Pattern Response Test (Digital Transmitters)

5.24.1 Purpose. This test verifies that the digital transmitter has the proper eye pattern when modulated with a randomized non-return-to-zero-level (RNRZ-L) signal at the maximum specified bit rate. The proper eye pattern response is a good indication that the transmitter deviation, transmitter premodulation filter and receiver filtering is properly matched to provide acceptable bit error rate performance.

5.24.2 Test Equipment. See paragraph 5.1.1

5.24.3 Test Method.

5.24.3.1 Setup. Connect test equipment as shown on Figure 5-30.

5.24.3.2 Conditions. Use conditions described in subparagraph 5.2.3.2 where applicable.

5.24.3.3 Procedures.

5.24.3.3.1 Set the equipment parameters as described in the following subparagraphs.

5.24.3.3.1.1 Receiver.

5.24.3.3.1.1.1 Intermediate frequency (IF) bandwidth: widest available, must be equal to or greater than the maximum bit rate specified in the associated specification sheet.

5.24.3.3.1.1.2 Video bandwidth: widest available or direct.

5.24.3.3.1.1.3 RF signal level: Adjust the attenuator for 40 dB carrier-to-noise ratio into the receiver.

5.24.3.3.1.2 PN Generator.

5.24.3.3.1.2.1 Format: RNRZ-L (2047-bit pattern).

5.24.3.3.1.2.2 Bit rate: The maximum bit rate specified.

5.24.3.3.1.2.3 Voltage level: transistor logic or equivalent.

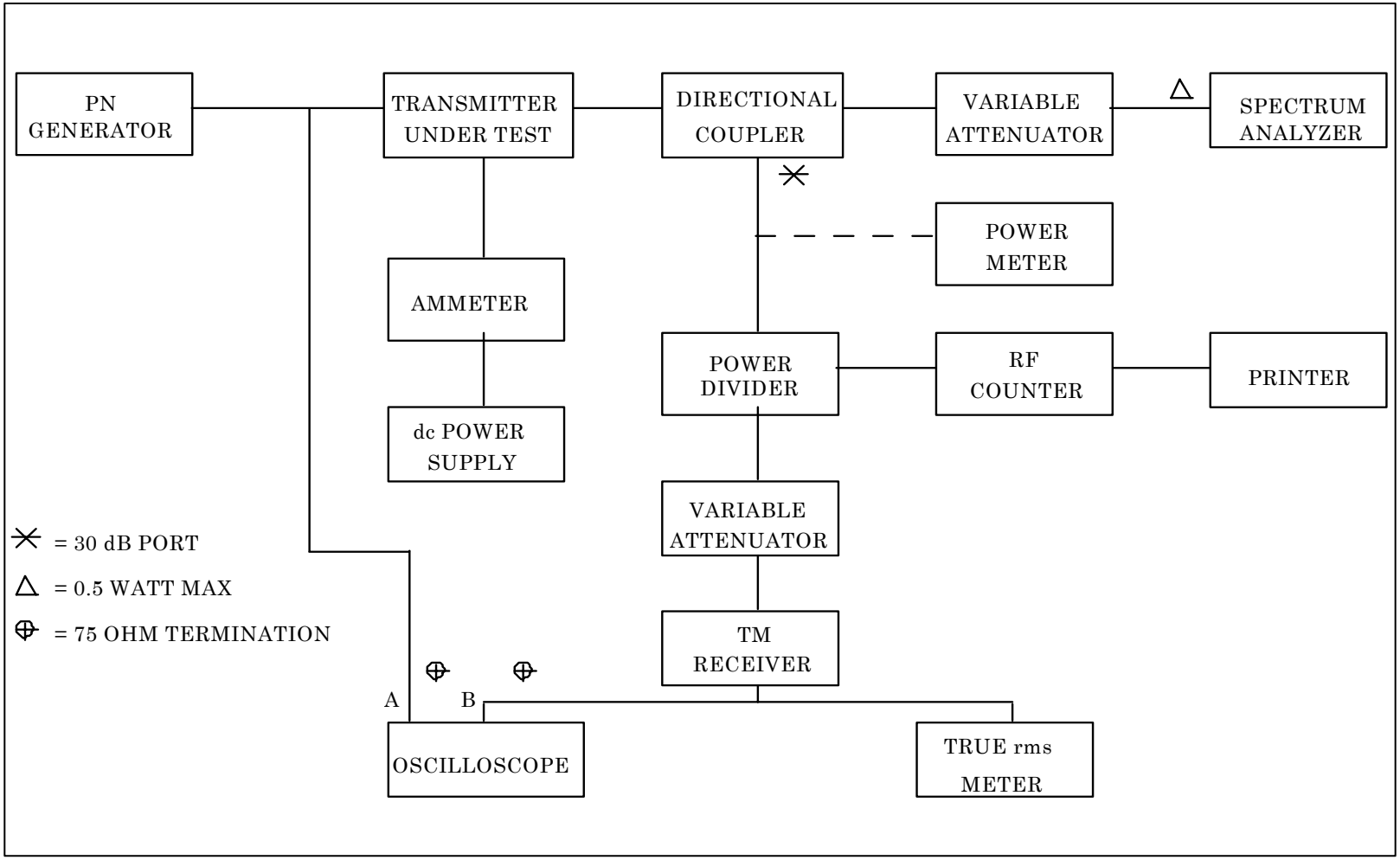

Figure 5-30. Eye pattern response test setup.

5.24.3.3.1.3 Eye Pattern Response Test Procedure. Perform the eye pattern response test as described in the following subparagraphs.

5.24.3.3.1.3.1 With the above PN generator connected to the transmitter modulation input, verify the presence of a signal at the output of the receiver.

5.24.3.3.1.3.2 Synchronize the oscilloscope to the clock frequency of the PN generator.

5.24.3.3.1.3.3 Adjust the horizontal rate to display between 5 and 8 "eyeballs."

5.24.3.3.1.3.4 Adjust the vertical gain to display a near full-scale pattern.

5.24.3.3.1.3.5 Measure both the peak-to-peak value of the outer envelope and the inside vertical dimension of the smallest eyeball. Record both values on Data Sheet 5.24.1. Calculate the ratio (see Figure 5-31) and record on Data Sheet 5.24.1.

5.24.3.3.1.3.6 Verify that the ratio of the inside vertical dimension of the smallest eyeball to the height of the outside envelope of the pattern is between 0.7 and 1.

5.24.3.3.1.3.7 Photograph the eyeball display and attach the photo to the Data Sheet 5.24.1.

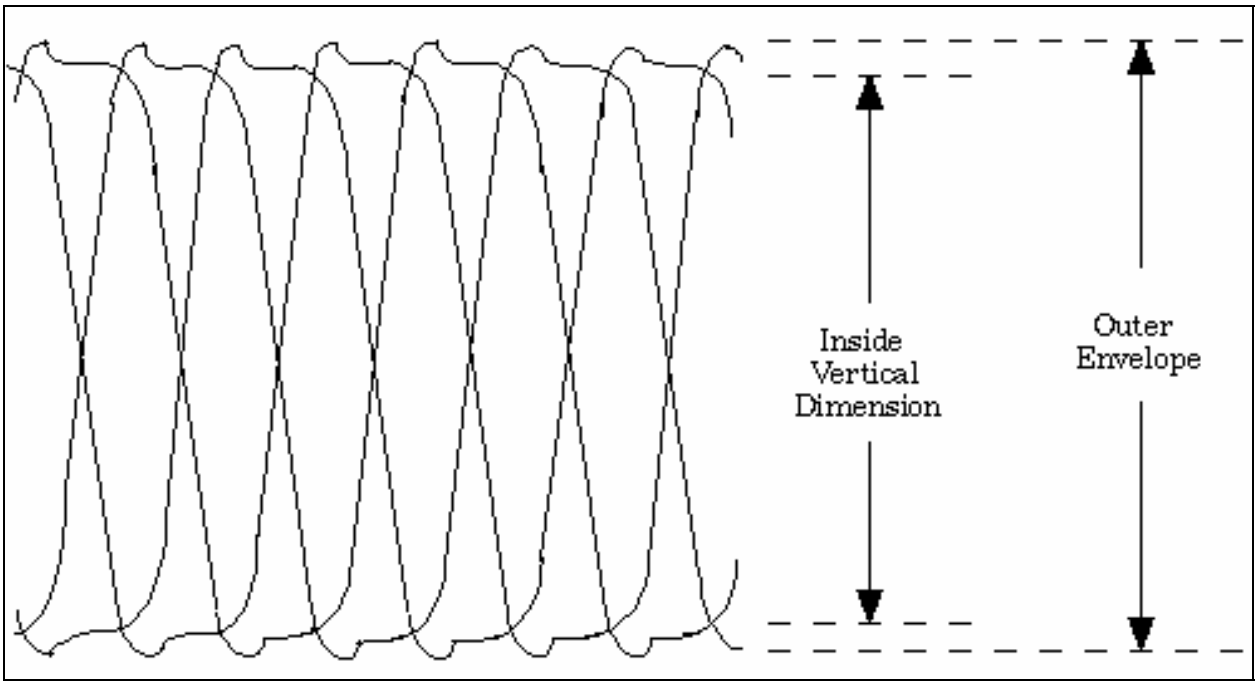

Figure 5-31. Eye pattern ratio calculation test.

DATA SHEET 5.24.1 TELEMETRY TRANSMITTERS - DIGITAL

Test 5.24: Eye Pattern Response

Manufacturer _____ Model _____ Serial No. _____

Test Personnel _____ Date _____

Peak-to-peak outer envelope measurement _____ V pp

Smallest eyeball inside vertical dimension _____ V pp

Ratio: _____ (Ratio = inside vertical dimension ÷ outer envelope measurement)

5.25 Spectral Occupancy Test (Digital Transmitters)

5.25.1 Purpose. This test measures the effect of the premodulation filter and the peak deviation on the radio frequency, RF, spectral occupancy of a digital transmitter. The premodulation filter and peak deviation must be properly tuned to avoid interference with users on adjacent channels and transmission of RF frequency components outside the allocated frequency range of operation.

5.25.2 Test Equipment. See paragraph 5.1.1

5.25.3 Test Method.

5.25.3.1 Setup. Connect test equipment as shown on Figure 5-32.

5.25.3.2 Conditions. Use conditions described in subparagraph 5.2.3.2 where applicable.

5.25.3.3 Procedures.

5.25.3.3.1 Spectral occupancy test setup. Set the equipment parameters as described in the following subparagraphs.

5.25.3.3.1.1 PN Generator.

5.25.3.3.1.1.1 Format: RNRZ-L (2047-bit pattern).

5.25.3.3.1.1.2 Bit Rate: The maximum bit rate specified.

5.25.3.3.1.1.3 Voltage level: TTL or equivalent.

5.25.3.3.2 Spectral Occupancy Bandwidth Test Procedure. Perform the bandwidth test as described in the following subparagraphs.

5.25.3.3.2.1 Set the modulating waveform as a TTL level rectangular wave with a frequency corresponding to the specified bit rate.

5.25.3.3.2.2 Using a calibrated spectrum analyzer, center the unmodulated carrier on the display and adjust the carrier to the 0-dB reference.

5.25.3.3.2.3 Turn modulation "on" and set the spectrum analyzer bandwidth to include all spectral components at a level of greater than –[55+10 log(P)] dBc. Where P is the transmitter power measured in Section 5.21. Photograph or plot the RF spectrum and identify both amplitude and frequency calibrations on the photo, attach to Data Sheet 5.25.1.

5.25.3.3.2.4 Verify that the spectral levels are within the spectral mask requirements of IRIG document 106, *Telemetry Standards*, Chapter 2.

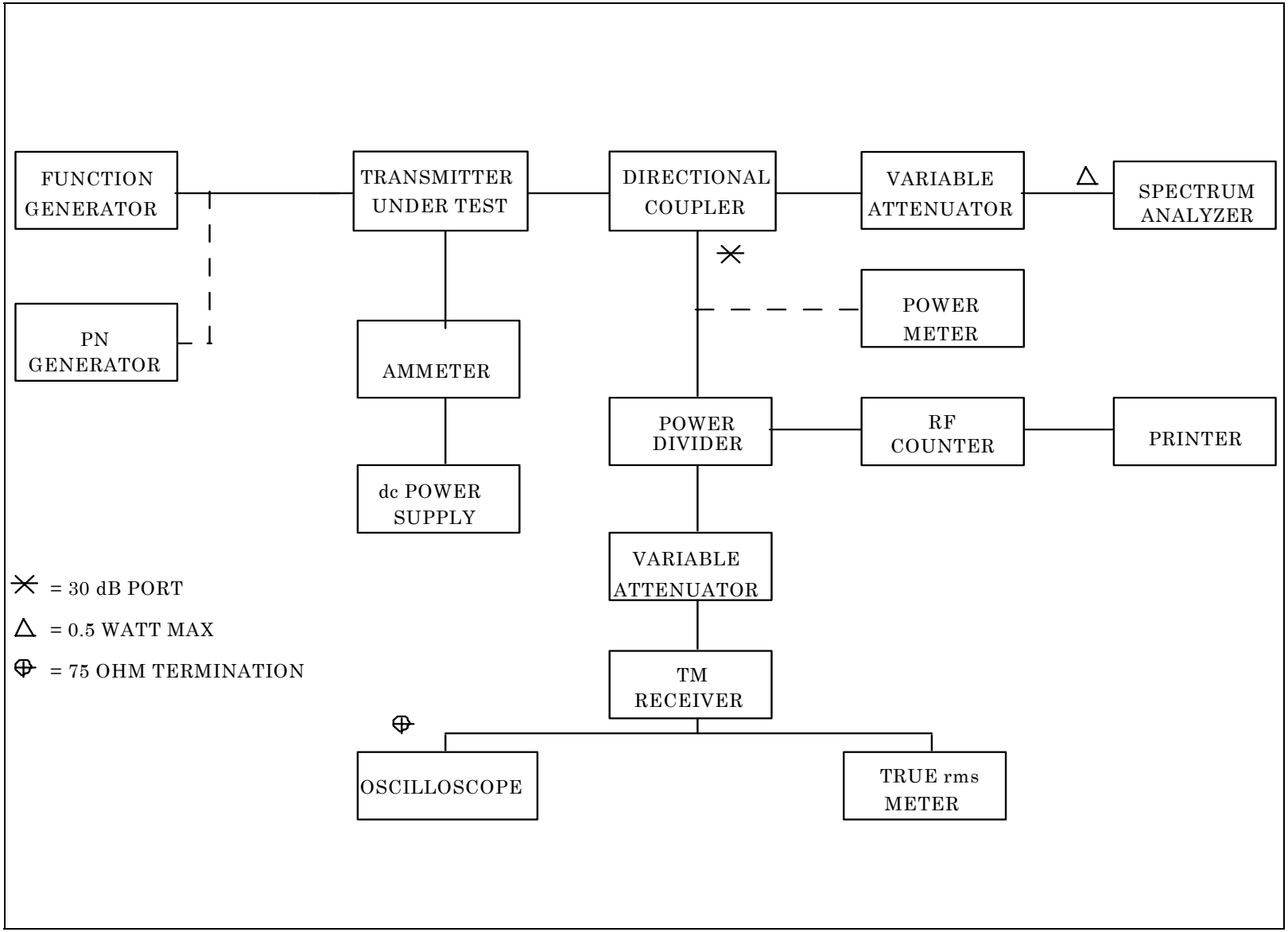

Figure 5-32. Premodulation filter test setup.

DATA SHEET 5.25.1 TELEMETRY TRANSMITTERS - DIGITAL

Test 5.25: Spectral Occupancy

Manufacturer _____ Model _____ Serial No. _____

Test Personnel _____ Date _____

Bit rate _____

Premodulation filter type _____

Premodulation filter bandwidth _____

Photo or plot of spectrum:

5.26 Occupied Bandwidth and –25 dBm Bandwidth Test

5.26.1 Purpose. This test measures the occupied bandwidth (99 percent power bandwidth) and the –25 dBm bandwidth of a telemetry transmitting system. These bandwidths can be used to determine if the system complies with its RF spectral occupancy requirements. This data can also be used to determine the interference levels to other systems. The bandwidths are illustrated on Figure 5-33 for a non-return-to-zero (NRZ) pulse code modulation (PCM)/frequency modulation (FM) signal.

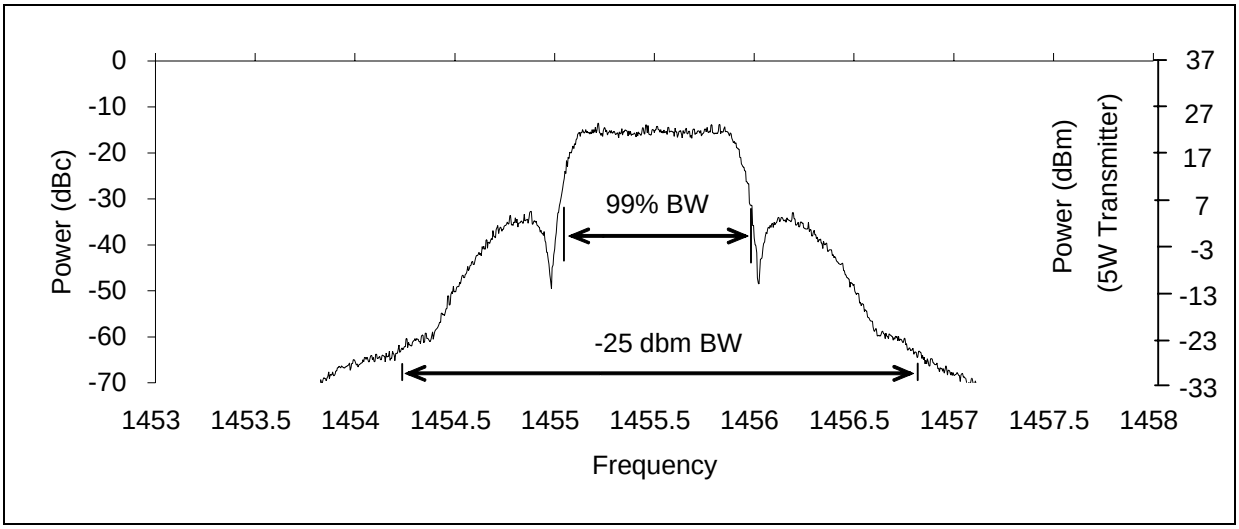

Figure 5-33. NRZ PCM/FM spectrum test.

5.26.2 Test Equipment. Spectrum analyzer with 30 kHz resolution bandwidth, 300 Hz video bandwidth, no max hold detector, and built-in calculation of 99 percent bandwidth; power meter; directional coupler; attenuators; power sources as required; receiving antenna, and amplifier for open-air testing.

5.26.3 Test Method.

5.26.3.1 Setup. Connect test equipment as shown on Figure 5-34 for a laboratory test or as shown on Figure 5-35 for an open-air test. The attenuator must be set such that the input level to the spectrum analyzer is below the specified damage level.

5.26.3.2 Conditions. This test can be performed with a telemetry transmitting system connected to a cable in the laboratory or on the flight line, or with the telemetry transmitting system radiating from an antenna in an open-air environment. The most accurate values will be obtained in a laboratory environment. However, reasonable accuracy can be obtained under operational conditions provided that severe multipath (or other propagation anomalies) is not present and that the received power levels are constant for the duration of the measurement. The bandwidth measurements are performed using a spectrum analyzer (or equivalent device) with the following settings: 10 kHz resolution bandwidth, 1 kHz video bandwidth, and max hold detector.

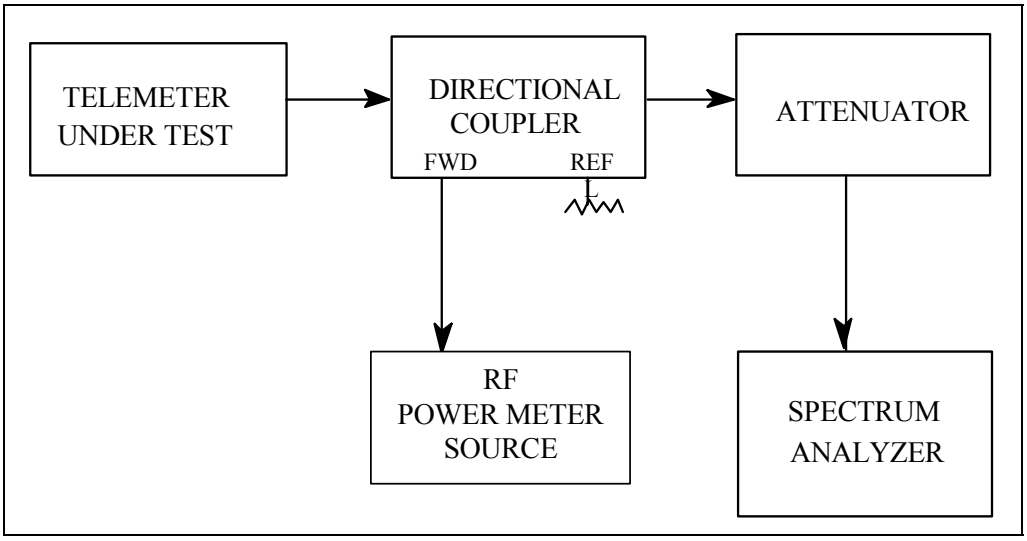

Figure 5-34. Laboratory setup.

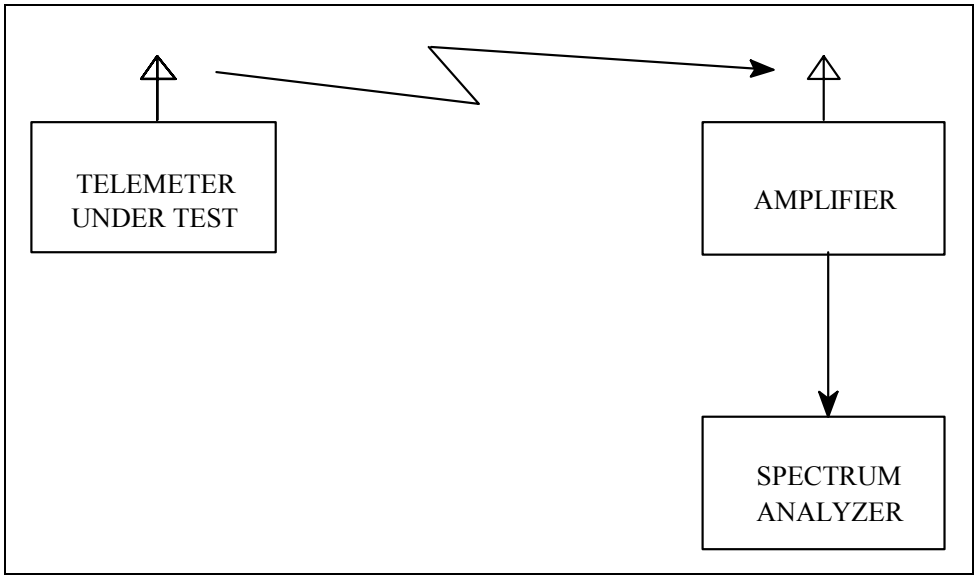

Figure 5-35. Open-air setup.

5.26.3.3 Procedure.

5.26.3.3.1 Set the spectrum analyzer center frequency equal to the center frequency of the telemeter and set the span equal to either ten times the bit rate for a digital (PCM) system or ten times the highest baseband frequency for an analog system.

5.26.3.3.2 If possible, set the telemeter to transmit an unmodulated carrier. Take several sweeps with the spectrum analyzer, find the peak value, and set the top of the display to this value. The peak value is the unmodulated carrier power measured at the spectrum analyzer input and will be used as a reference value for later measurements. If unmodulated carrier transmission is not possible, the total carrier power at the spectrum analyzer input can be found for most practical FM and PM systems by setting the spectrum analyzer's resolution and video bandwidths to their widest settings, setting the analyzer detector to max hold, and allowing the analyzer to make several sweeps (see Figure 5-36). The maximum value of this trace will be a good approximation of the unmodulated carrier level provided that the spectrum analyzer bandwidths are at least 10 percent of the bit rate for a PCM system. Set the top of the display to the peak value. Figure 5-36 shows the spectrum of a 5 Mbps randomized NRZ PCM/FM signal measured using the standard spectrum analyzer settings discussed previously and the spectrum measured using 3-MHz resolution and video bandwidths and max hold detector. The peak of the spectrum measured with the latter conditions is very close to 0 dBc and can be used to estimate the unmodulated carrier power (0 dBc) in the presence of frequency or phase modulation. If possible, measure the power using the power meter and record the results on Data Sheet 5.26.1 after correcting for the losses between the transmitter and the power meter. If a direct power measurement is not possible, record the specified power level on Data Sheet 5.26.1.

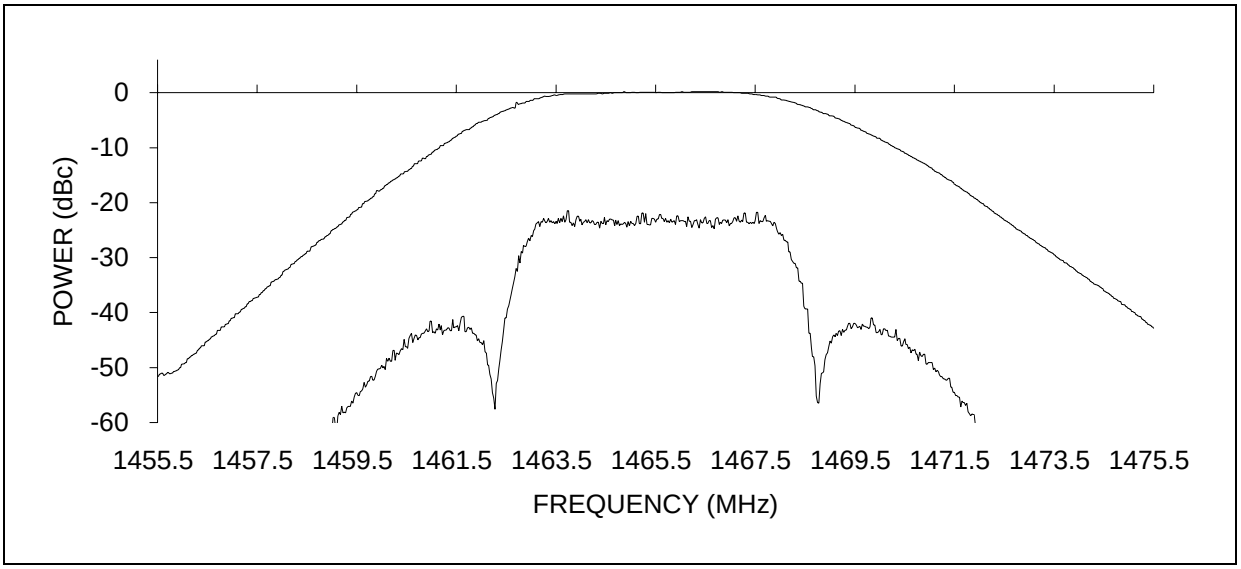

Figure 5-36. Spectrum analyzer calibration of 0 dBc level (modulated carrier).

5.26.3.3.3 Configure the spectrum analyzer to the following settings: 10 kHz resolution bandwidth, 1 kHz video bandwidth, and max hold detector. If the transmitter is unmodulated, turn modulation on. Allow the analyzer to take several sweeps. For a cabled test, verify that the spectral components decrease to –70 dBc (or less) before the edge of the span. (This value of attenuation is desirable for all tests but may not be achievable for open-air testing.) Set the span width such that the –70 dBc points are included in the spectrum. Allow the analyzer to take several sweeps. Perform the 99 percent power bandwidth calculation. This calculation is a built-in routine for many modern spectrum analyzers. This bandwidth can also be calculated by transferring the measured data to a digital computer and finding the frequencies where 0.5 percent of the total power is above and below these frequencies. Record the two band edges of the upper 99 percent power bandwidth and the lower 99 percent power bandwidth (difference between the two band edges) on Data Sheet 5.26.1.

5.26.3.3.4 A power level of –25 dBm is exactly equivalent to an attenuation of the transmitter power by 55 + 10 log (P) dB where P is the transmitter power expressed in watts. Find the difference in power levels between the transmitter output power and M25 dBm. For example, this difference is 62 dB for a 5-watt transmitter (37 dBm – (–25 dBm)). Find the two frequencies where all signals above (or below) the frequency are at least the calculated number of dB below the unmodulated carrier level. Record these two frequencies and the difference between them (–25 dBm bandwidth) on Data Sheet 5.26.1.

5.26.3.4 Data Reduction. Verify that the measured power levels are within the spectral mask requirements of IRIG document 106, *Telemetry Standards*, Chapter 2.

DATA SHEET 5.26.1 TELEMETRY TRANSMITTING SYSTEMS

Test 5.26: Occupied Bandwidth and –25 dBm Bandwidth

Manufacturer _____ Model _____ Serial No. _____

Test Personnel _____ Date _____

Bit rate _____

Output power _____

Lower 99% bandwidth _____

Upper 99% bandwidth _____

99% bandwidth _____

Lower –25 dBm bandwidth _____

Upper –25 dBm bandwidth _____

–25 dBm bandwidth _____

Attach photo or plot of spectrum:

5.27 Filtered OQPSK Transmitter Quality Test

5.27.1 Purpose. The purpose of this test is to estimate the errors in the filtered offset quadrature phase shift keying (OQPSK) transmitter by measuring the level of the remnant carrier and residual sideband. The remnant carrier level is mainly a function of DC offset imbalances in the transmitter while the residual sideband level is determined by quadrature imbalances and phase errors. The primary effects of poor transmitter quality are increased bit error rate, bit rate spurs, and wider RF spectrum. Filtered OQPSK is used in these test methods as a generic term that includes FQPSK-B, FQPSK-JR, and SOQPSK-TG plus other modulation methods with similar characteristics.

5.27.2 Test Equipment. Programmable digital data source with outputs matched to transmitter, i.e., TTL, ECL, etc (some bit error rate test sets will provide the required data patterns), spectrum analyzer, power attenuator.

5.27.3 Test Method.

5.27.3.1 Setup. Connect test equipment as shown on Figure 5-37. The data and clock signals must be in compliance with the transmitter specification.

5.27.3.2 Conditions. Use test conditions described in subparagraph 5.2.3.2 except that the use of a 50 ohm load is acceptable.

5.27.3.3 Procedure.

5.27.3.3.1 Setup the spectrum analyzer as follows: Center frequency: carrier frequency, Span: 2 times bit rate, Resolution BW: 30 kHz, Video BW: 300 Hz, Detector mode: peak hold off, averaging off.

5.27.3.3.2 Connect the spectrum analyzer to the transmitter's radio frequency output through an attenuator with appropriate attenuation and power handling capability to protect the spectrum analyzer (30 dB should be adequate for most transmitter/spectrum analyzer combinations but one should determine the correct minimum value based on the actual transmitter power and spectrum analyzer maximum input level). Connect the data and clock signals to the transmitter. Set the programmable digital generator to produce an alternating pattern of ones and zeros "101010" at the desired bit rate (this pattern should produce an unmodulated carrier). Measure the carrier power and record on Data Sheet 5.27.1. The carrier power level is the 0 dBc value.

5.27.3.3.3 A continuous run of ones or a continuous run of zeroes applied to the baseband input will cause an ideal filtered OQPSK transmitter to produce a full power sideband tone offset from the carrier frequency by precisely (bit rate / 4). A continuous string of ones produces the lower sideband at f_c - bit rate/4 and a continuous string of zeroes produces the upper sideband at f_c + bit rate/4. In addition to the desired sideband tone, practical filtered OQPSK transmitters will produce a remnant carrier directly related to carrier suppression, remnants of the opposite sideband tone, and other spectral components. Apply a continuous string of ones to the transmitter data input. Measure the spectrum and record on the Data Sheet the levels at the carrier frequency, at frequencies equal to the bit rate/4 above and below the carrier and any other

components larger than –40 dBc. Repeat for a continuous string of zeroes. Repeat for other bit rates as required.

5.27.3.4 Data Reduction. Calculate and record the levels in dBc by subtracting the carrier power measured in 5.27.3.3.2 from the values measured in 5.27.3.3.3.

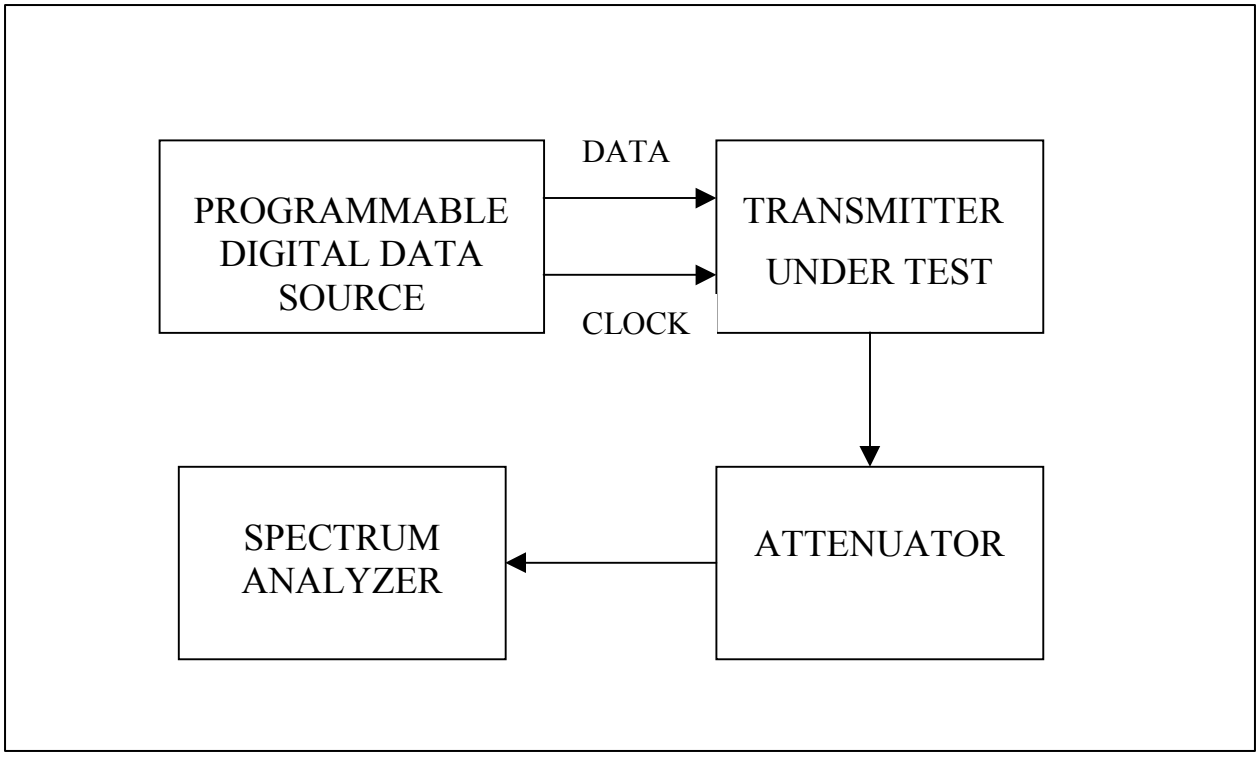

Figure 5-37. Test setup for transmitter quality and spectral mask tests.

DATA SHEET 5.27.1 TELEMETRY TRANSMITTERS

Test 5.27: Filtered OQPSK Transmitter Quality Test

Manufacturer _____ Model _____ Serial No. _____

Test Personnel _____ Date _____

Center Frequency _____ MHz

Data and Clock Interface _____ .

Bit Rate Tested _____ Mb/s

INPUT	FREQUENCY	LEVEL (dBm)	LEVEL (dBc)
“101010”	Carrier		0
“111111”	Carrier-bit rate/4		
“111111”	Carrier		
“111111”	Carrier+bit rate/4		
“111111”			
“111111”			
“000000”	Carrier-bit rate/4		
“000000”	Carrier		
“000000”	Carrier+bit rate/4		
“000000”			
“000000”			

5.28 Spectral Mask Test

5.28.1 Purpose. The purpose of this test is to verify that the RF output of a transmitter meets the spectral mask.

5.28.2 Test Equipment. Programmable digital data source with outputs matched to transmitter, i.e., TTL, ECL, etc (some bit error rate test sets will provide the required data patterns), spectrum analyzer, power attenuator.

5.28.3 Test Method.

5.28.3.1 Setup. Connect test equipment as shown on Figure 5-37. The data and clock signals must be in compliance with the transmitter specification.

5.28.3.2 Conditions. Use test conditions described in subparagraph 5.2.3.2 except the use of a 50 ohm load is acceptable.

5.28.3.3 Procedure.

5.28.3.3.1 Setup the spectrum analyzer as follows: Center frequency: carrier frequency, Span: 5 times bit rate, Resolution BW: 30 kHz, Video BW: 300 Hz, Detector mode: peak hold off, averaging off.

5.28.3.3.2 Connect the spectrum analyzer to the transmitter's radio frequency output through an attenuator with appropriate attenuation to protect the spectrum analyzer (30 dB should be adequate for most transmitter/spectrum analyzer combinations but one should determine the correct minimum value based on the actual transmitter power and spectrum analyzer maximum input level). Connect the data and clock signals to the transmitter. Set the programmable digital generator or the transmitter (if the transmitter has this capability) to produce an unmodulated carrier. Measure the carrier power and record on Data Sheet 5.28.1. The carrier power level is the 0 dBc value.

5.28.3.3.3 Set the programmable digital generator to produce a pseudo noise sequence of length at least 2047 bits and preferably at least 2^{20}-1 bits long and set the transmitter to external modulation if required. Measure the spectrum and attach the measured spectrum to the data sheet.

5.28.3.4 Data Reduction. Convert the measured values to dBc by subtracting the measured carrier power with the unmodulated carrier from the measured values with the PN sequence. If discrete spectral components are present record the levels of both the discrete and continuous terms on the appropriate lines. Compare the measured spectrum to the spectral mask (see the latest edition of the Telemetry Standards IRIG 106).

DATA SHEET 5.28.1 TELEMETRY TRANSMITTERS

Test 5.28: Spectral Mask Test

Manufacturer _____ Model _____ Serial No. _____

Test Personnel _____ Date _____

Center Frequency _____ MHz

Data and Clock Interface _____ .

Bit Rate Tested _____ Mb/s

INPUT	FREQUENCY	LEVEL (dBm)	LEVEL (dBc)
	Carrier		0
PN	Carrier-bit rate		
PN	Carrier-.9bit rate		
PN	Carrier-.8bit rate		
PN	Carrier-.7bit rate		
PN	Carrier-.6bit rate		
PN	Carrier-.5bit rate		
PN	Carrier		
PN	Carrier+.5bit rate		
PN	Carrier+.6bit rate		
PN	Carrier+.7bit rate		
PN	Carrier+.8bit rate		
PN	Carrier+.9bit rate		
PN	Carrier+bit rate		

5.29 Transmitter Phase Noise Test

5.29.1 Purpose. The purpose of this test is to verify that the single sideband phase noise of the transmitter meets the specification. Excess phase noise can increase bit error rate at a given E_b/N_o and degrade demodulator synchronization performance. This test assumes that a swept spectrum analyzer is the only tool available and is limited to frequency offsets greater than 100 Hz. Measurements at lower frequency offsets tend to be unreliable and very time consuming. Measurements closer to the carrier frequency can be made with very high quality spectrum analyzers exhibiting low internal phase noise and reliable 1 Hz or 3 Hz resolution bandwidth settings. Specialized phase noise test sets are always the best choice especially if measurements must be made at frequency offsets below 100 Hz.

5.29.2 Test Equipment. Programmable digital data source with outputs matched to transmitter, i.e., TTL, ECL, etc (some bit error rate test sets will provide the required data patterns), spectrum analyzer with 10 Hz resolution bandwidth or phase noise test set, power attenuator.

5.29.3 Test Method.

5.29.3.1 Setup. Connect test equipment as shown on Figure 5-38. If a phase noise test set is available, connect the equipment and conduct the test in accordance with manufacturer instructions.

5.29.3.2 Conditions. Use test conditions described in subparagraph 5.2.3.2 except the use of a 50 ohm load is acceptable.

5.29.3.3 Procedure.

5.29.3.3.1 Connect the spectrum analyzer to the transmitter's radio frequency output through an attenuator with appropriate attenuation to protect the spectrum analyzer (30 dB should be adequate for most transmitter/spectrum analyzer combinations but one should determine the correct minimum value based on the actual transmitter power and spectrum analyzer maximum input level). Connect the data and clock signals to the transmitter. Set the programmable digital generator or the transmitter itself (if the transmitter has this feature) to produce an unmodulated carrier.

5.29.3.3.2 If the spectrum analyzer has a phase noise measurement mode, follow the manufacturer instructions for this test. Otherwise, set the spectrum analyzer center frequency to the transmitter carrier frequency. Set the span to 2 MHz with continuous sweep. Set the reference level such that the peak of the signal is near the top of the display. Set the center frequency such that the maximum signal is 10 to 20% of full scale from the left edge of the display. Set the resolution bandwidth to 10 kHz and video bandwidth to 10 kHz. Average the spectrum over 100 sweeps. Record the maximum signal level on Data Sheet 5.29.1 (0 dBc level). If the analyzer has a power per 1 Hz measurement mode (sometimes referred to as noise mode), set the analyzer to that mode (only use the 1 Hz mode to measure the noise sidebands, do not use for the carrier level or for any discrete sidebands). Otherwise, correct for resolution bandwidth and detector error by subtracting 37.5 dB in the signal processing step (-40 dB for

conversion from 10 kHz to 1 Hz bandwidth +2.5 dB for typical spectrum analyzer detector error with noise-like signal). Use Data Sheet 5.29.1 to record power levels at frequency offsets of +100 kHz, +200 kHz, +500 kHz, and +1000 kHz from the maximum signal (one can use peak search and delta marker functions to simplify the process). Record the frequency and level of any discrete components larger than -45 dBc and any abnormally large continuous components. The results are valid only if the measured levels are at least 6 dB above the spectrum analyzer noise floor.

5.29.3.3.3 Set the span to 100 kHz with continuous sweep. Set the reference level such that the peak of the signal is near the top of the display. Set the center frequency such that the maximum signal is 10 to 20% of full scale from the left edge of the display. Set the resolution bandwidth to 1 kHz and video bandwidth to 1 kHz. Average the spectrum over 100 sweeps. Record the maximum signal level on Data Sheet 5.29.1 (0 dBc level). If the analyzer has a power per 1 Hz measurement mode (sometimes referred to as noise mode), set the analyzer to that mode (only use the 1 Hz mode to measure the noise sidebands, do not use for the carrier level or for any discrete sidebands). Otherwise, correct for resolution bandwidth and detector error by subtracting 27.5 dB in the signal processing step (-30 dB for conversion from 1 kHz to 1 Hz bandwidth +2.5 dB for typical spectrum analyzer detector error with noise-like signal). Use Data Sheet 5.29.1 to record power levels at frequency offsets of +10 kHz, +20 kHz, and +50 kHz from the maximum signal (one can use peak search and delta marker functions to simplify the process). Record the frequency and level of any discrete components larger than -45 dBc and any abnormally large continuous components. The results are valid only if the measured levels are at least 6 dB above the spectrum analyzer noise floor.

5.29.3.3.4 Set the spectrum analyzer center frequency to the transmitter carrier frequency. Set the span to 10 kHz and continuous sweep. Set the reference level such that the peak of the signal is near the top of the display and set the center frequency such that the maximum signal is 10 to 20% of full scale from the left edge of the display. Set the resolution bandwidth to 100 Hz and video bandwidth to 100 Hz. Average the spectrum over 100 sweeps. Record the maximum signal level on Data Sheet 5.29.1 (0 dBc level). If the analyzer has a power per 1 Hz measurement mode, set the analyzer to that mode. Otherwise, correct the readings by subtracting 17.5 dB in the signal processing step (-20 dB for conversion from 100 Hz to 1 Hz bandwidth +2.5 dB for typical spectrum analyzer detector error with noise-like signal). Use Data Sheet 5.29.1 to record power levels at frequency offsets of +1 kHz, +2 kHz, and +5 kHz from the maximum signal. Record the frequency and level of any discrete components larger than -45 dBc and any abnormally large continuous components.

5.29.3.3.5 Optional test because of long time duration. Set the spectrum analyzer center frequency to the transmitter carrier frequency. Set the span to 1 kHz and continuous sweep. Set the reference level such that the peak of the signal is near the top of the display and set the center frequency such that the maximum signal is 10 to 20% of full scale from the left edge of the display. Set the resolution bandwidth to 10 Hz and video bandwidth to 10 Hz. Average the spectrum over 100 sweeps. Record the maximum signal level on Data Sheet 5.29.1 (0 dBc level). If the analyzer has a power per 1 Hz measurement mode, set the analyzer to that mode. Otherwise, correct the readings by subtracting 7.5 dB in the signal processing step (-10 dB for conversion from 10 Hz to 1 Hz bandwidth +2.5 dB for typical spectrum analyzer detector error with noise-like signal). Use Data Sheet 5.29.1 to record power levels at frequency offsets of

+100 Hz, +200 Hz, and +500 Hz from the maximum signal. Record the frequency and level of any discrete components larger than -45 dBc and any abnormally large continuous components.

5.29.3.4 Data Reduction. Calculate phase noise by subtracting the main signal level from the measured noise level. If the spectrum analyzer does not have a power per Hz mode, correct for resolution bandwidth and detector errors by subtracting 37.5, 27.5, 17.5, or 7.5 dB as appropriate (see above).

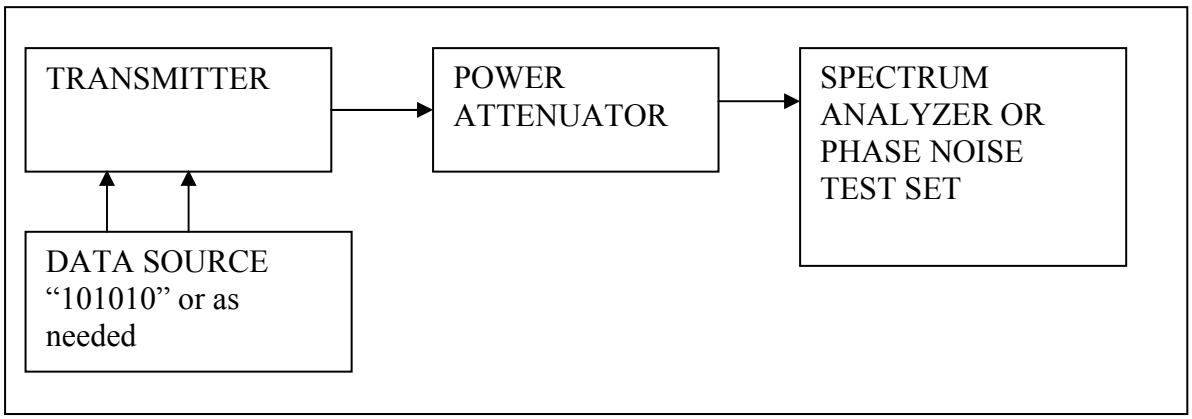

Figure 5-38. Test setup for transmitter phase noise test.

DATA SHEET 5.29.1 TELEMETRY TRANSMITTERS

Test 5.29: Transmitter Phase Noise Test

Manufacturer _____ Model _____ Serial No. _____

Test Personnel _____ Date _____

Center Frequency _____ MHz Maximum signal level _____ dBm

Frequency (offset from carrier (kHz))	Measured Power Level (dBm)	Phase Noise (dBc/Hz)
0.1		
0.2		
0.5		
1		
2		
5		
10		
20		
50		
100		
200		
500		
1000		

5.30 Transmitter Bit Error Probability (BEP) versus Eb/N0

5.30.1 Purpose. The purpose of this test to measure BEP versus E_b/N_0 at the output of the transmitter. This test uses a high quality downconverter plus demodulator to determine if the transmitter characteristics are affecting the BEP versus E_b/N_0 performance.

5.30.2 Test Equipment. Bit error rate test set (with outputs matched to transmitter inputs, i.e., TTL, ECL, etc), attenuator, high quality downconverter, noise test set, high quality demodulator.

5.30.3 Test Method.

5.30.3.1 Setup. Connect test equipment as shown on Figure 5-39.

5.30.3.2 Conditions. The downconverter could consist of a double balanced mixer plus laboratory quality signal generator or could be a telemetry receiver with appropriate IF bandwidth, low phase noise and good group delay characteristics. The transmitter output must be attenuated by a suitable power attenuator with enough attenuation to protect the following test equipment. The noise test set establishes the E_b/N_0. The demodulator should be a high quality demodulator which is compatible with the modulation method used in the transmitter. The demodulator performance can be "calibrated" by using a laboratory quality reference transmitter in place of the transmitter under test and measuring BEP versus E_b/N_0 under laboratory conditions.

5.30.3.3 Procedure.

5.30.3.3.1 Set the bit error test set to generate the desired bit rate with a pseudo noise sequence length of at least 2^{11}-1 (2047) bits and preferably at least 2^{20}-1 bits long (the longer sequence is a better simulation of the characteristics of an encrypted signal).

5.30.3.3.2 Run noise test set self-calibration. Set the initial E_b/N_0 to 15 dB using the noise test set and verify that the bit error test set synchronizes in the non-inverted state. If the bit error test set does not synchronize, invert the output polarity of the demodulator. If the bit error test set now synchronizes, there is a polarity inversion somewhere.

5.30.3.3.3 Set the initial E_b/N_0 to 15 dB using the noise test set and measure the bit errors in an interval of 10^7 or 10^8 bits. If the bit error rate is larger than 1 per 10^6 bits, increase the E_b/N_0 until the error rate is less than 1 error per 10^6 bits and record the E_b/N_0 as the starting value on the data sheet. Measure the bit error probability in one dB intervals (reduce the E_b/N_0 by 1 dB for each step) and record the E_b/N_0 and bit error probability on Data Sheet 5.30.1. If more than 1000 errors occur in an interval, the measurement time can be reduced by a factor of 10 without significantly degrading accuracy.

5.30.3.3.4 Repeat for other bit rates as desired.

5.30.3.4 Data Reduction. Compare the measured BEP versus E_b/N_0 with the specification. Plot the data and interpolate between points to estimate the BEP at a given E_b/N_0 or to find the E_b/N_0 that is required for a given BEP.

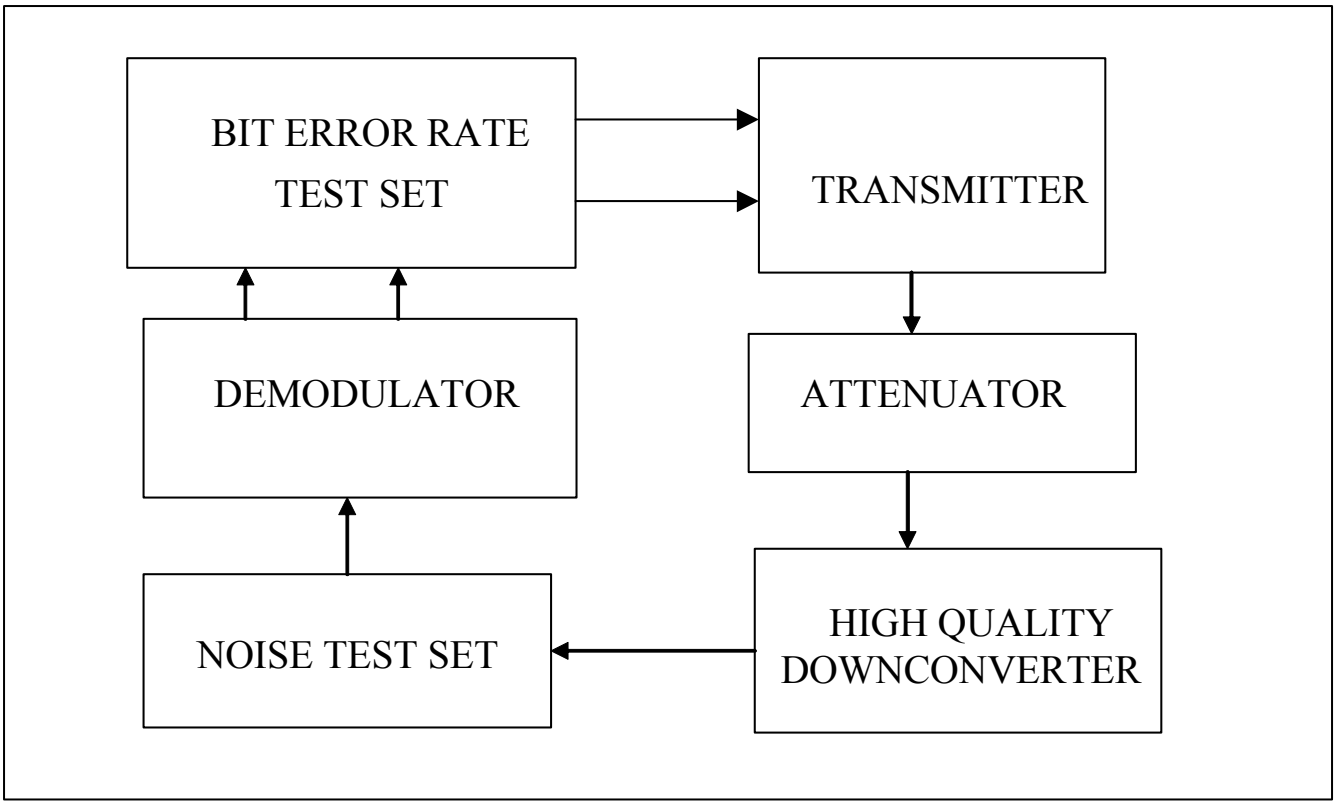

Figure 5-39. Test setup for transmitter bit error probability test.

DATA SHEET 5.30.1 TELEMETRY TRANSMITTERS

Test 5.30: Bit Error Probability versus E_b/N_0

Manufacturer _____ Model _____ Serial No. _____

Test Personnel _____ Date _____

Center Frequency _____MHz

Data and Clock Interface TTL ECL (Circle correct type or write-in type)

Bit Rate Tested _____Mb/s

E_b/N_0	Bit Error Probability

5.31 Software Receiver Analysis of Filtered OQPSK Transmitter Signals

5.31.1 Purpose. Most significant attributes of a constant envelope filtered OQPSK signal can be evaluated with minimal test equipment and a software tool called the Tier 1 Modulation Analyzer (T1MA). The T1MA is available to Government agencies and Government contractors. Please contact the RCC Secretariat to get a copy. It is useful as a supplement to, or in lieu of, the conventional tests described in sections 5.27 through 5.30. Its distribution is accompanied by an *Installation and Operating Guide* (see Appendix E) and reference files that allow verification of proper analyzer operation. The T1MA data products include Euclidean distance loss, signal deviation ratio, transmitter contribution to system loss at benchmark bit error probabilities, noise margin, and a variety of graphic aids for signal distortion identification. Please refer to the application note *Evaluation of Constant Envelope Offset Quadrature Phase Shift Keying Transmitters with a Software Based Signal Analyzer* (see Appendix F) for a description of these data products.

5.31.2 Test Equipment and Required Software.

5.31.2.1 In addition to the transmitter under test and a suitable pseudo-random bit pattern generator with bit strobe (clock), the equipment listed below (or a functional equivalent of each item) is required. Low phase noise is very important.

a. LeCroy LC584AL oscilloscope,
b. RF power attenuator (50 Ω impedance),
c. Anritsu MG5633A or Agilent 4432 signal generator,
d. Anaren model 75125 mixer,
e. Mini-Circuits SLP-100 low pass filter, and
f. Mini-circuits ZLF500HLN amplifier.

5.31.2.2 The T1MA is implemented with Matlab and Simulink from the Mathworks Inc. and requires the following product licenses:

a. Matlab
    Matlab
    Signal Processing Toolbox
    Communications Toolbox
b. Simulink
    Simulink
    Communications Blockset
    Signal Processing Blockset

Version 1.03 has only been tested on personal computers (PCs) running Windows 2000 and Windows XP operating systems with Matlab release 14, version 7.0.1.24704(R14) Service Pack 1. Certain changes made to the model are likely to preclude compatibility with earlier Matlab versions.

The T1MA is very computation intensive. This fact, coupled with the underlying manner in which Matlab uses and manages memory under Microsoft Windows, dictates a high speed PC and a lot of memory (RAM). A candidate host should have a CPU clock speed of at least 1 GHz and at least 512 MB of RAM. Otherwise, the application will certainly run slow, and may exhibit mysterious run time failures.

The RCC Secretariat should be consulted regarding Matlab release versions and T1MA compatibility.

5.31.3 Test Method.

5.31.3.1 Setup.

5.31.3.1.1 Connect the equipment in accordance with Figure 5-40. The attenuator should be chosen for power handling capability consistent with the transmitter output and presentation of an RF level within the linear operating range of the mixer (-15 dBm ± 3 dB is recommended for the Anaren unit cited). The mixer local oscillator (LO) drive level (signal generator output level) should be set at the mixer manufacturer's recommended drive level for minimum distortion (+10 dBm, +1, -3 dB for the Anaren unit). The oscillator output frequency is normally set precisely 70 MHz below the desired transmitter carrier frequency. 70 MHz intermediate frequency errors larger than ± 10 kHz can cause erratic performance of the analyzer Costas loop. The oscilloscope input is connected directly to the post-filter amplifier via coaxial cable. Input coupling is set for DC, 50 Ω impedance.

5.31.3.1.2 Arrangements for transfer of oscilloscope sample block sets are unique to each situation and should be implemented according to preference, oscilloscope data transfer options, and the T1MA host computer configuration.

5.31.3.2 Conditions.

Minor signal distortions that are functions of carrier frequency and input bit rate are to be expected. Transmitters exhibiting marginal performance or peculiar behavior in conventional tests are likely to exhibit stronger frequency or bit rate dependencies. Therefore, it is recommended that transmitters intended for general use be checked at lower, mid-range, and upper extents of rated carrier frequency settings. In addition, signal quality should be measured at a variety of bit rates at each carrier frequency of interest.

5.31.3.3 Procedure.

Apply power to the transmitter and modulate the signal with a pseudo-random bit pattern. Pattern length is not critical but should be longer than 2^3-1 bits (2^{11}-1 is a recommended length). Adjust the oscilloscope horizontal sweep to view the signal envelope. For oscilloscopes with 8-bit analog to digital converters, adjust the vertical deflection sensitivity to use at least 80percent of the oscilloscope input dynamic range, but avoid clipping. Adjust the sweep and trigger controls to capture continuous segments of at least 500k samples to internal memory upon demand, at a sample rate of 100 MS/s. It is advisable to capture more than one sample set at

each test condition in order to assess the variance of results. Significant block to block variation can indicate transmitter or test equipment problems.

Transfer each sample set to the modulation analyzer host file directories as directed in the T1MA instructions. Reformat the oscilloscope sample file if necessary and then apply the analyzer to each sample set.

5.31.3.4 Data Reduction.

Data reduction consists of running the analyzer on each sample file and selective printing (or file capture) of desired data products.

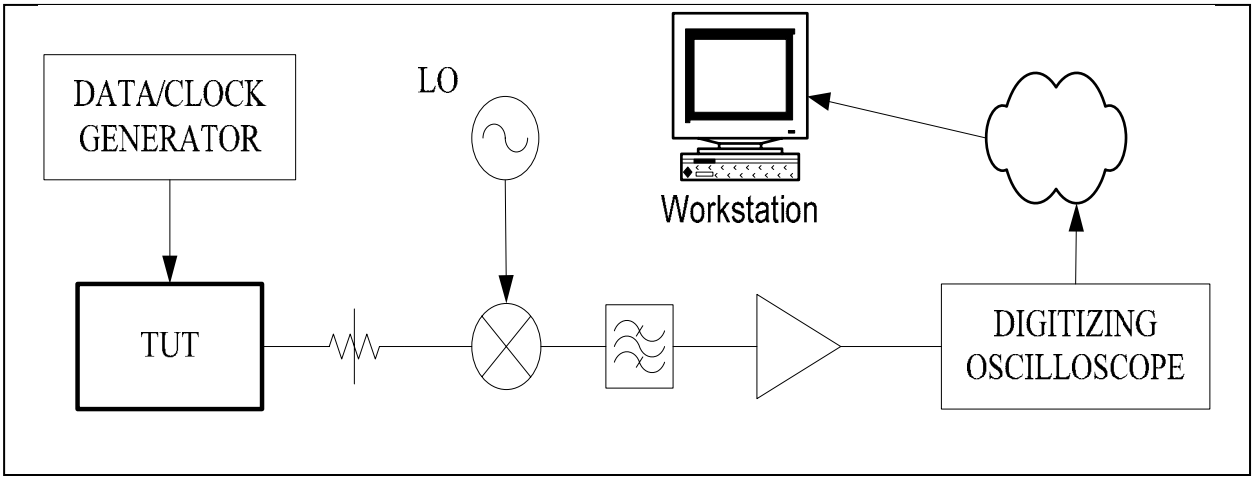

Figure 5-40. Test setup for data digitization and software receiver data processing.

This page intentionally left blank.

CHAPTER 6

MIL-STD-1553 DATA ACQUISITION EQUIPMENT

6.1 General

This Chapter provides the user with a limited set of test procedures or methodologies to verify the functional performance of MIL-STD-1553[1] data acquisition equipment designed to conform to IRIG Document 106, Chapter 8.

The set of tests described in this Chapter is not all-inclusive, but rather is limited to the more critical Chapter 8 requirements. Additional tests needed to fully characterize the equipment are generally applied to the MIL-STD-1553 interface and other unit under test (UUT) specific input/output (I/O) capabilities.

NOTE

These tests are structured as methodologies since the specifics of each are peculiar to the test equipment available and the make and model of the UUT. The user is assumed to have a working knowledge of both the test equipment and the bus monitoring units.

6.2 Recorder Output Format Test

6.2.1 Purpose. This test verifies the format of the recorder outputs of the UUT.

6.2.2 Test Equipment. MIL-STD-1553 simulator, time code generator, bit sync/decommutator (hardware or software), data merger (hardware or software), and logic analyzer/computer.

6.2.3 Test Method.

6.2.3.1 Setup. Connect the test equipment as shown in Figure 6-1(a).

[1] MIL-STD-1553, *Aircraft Internal Time Division Command/Response Multiplex Data Bus.*

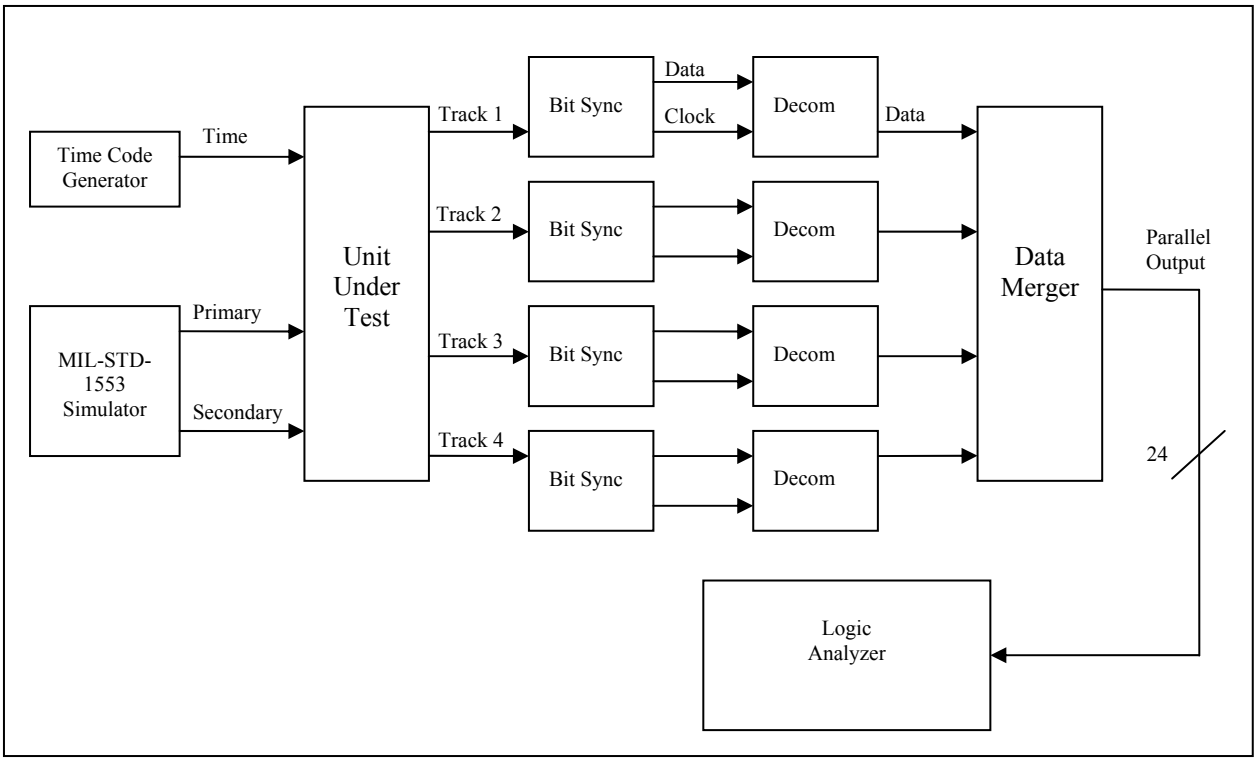

Figure 6-1. Hardware-based test setup for track spread data.

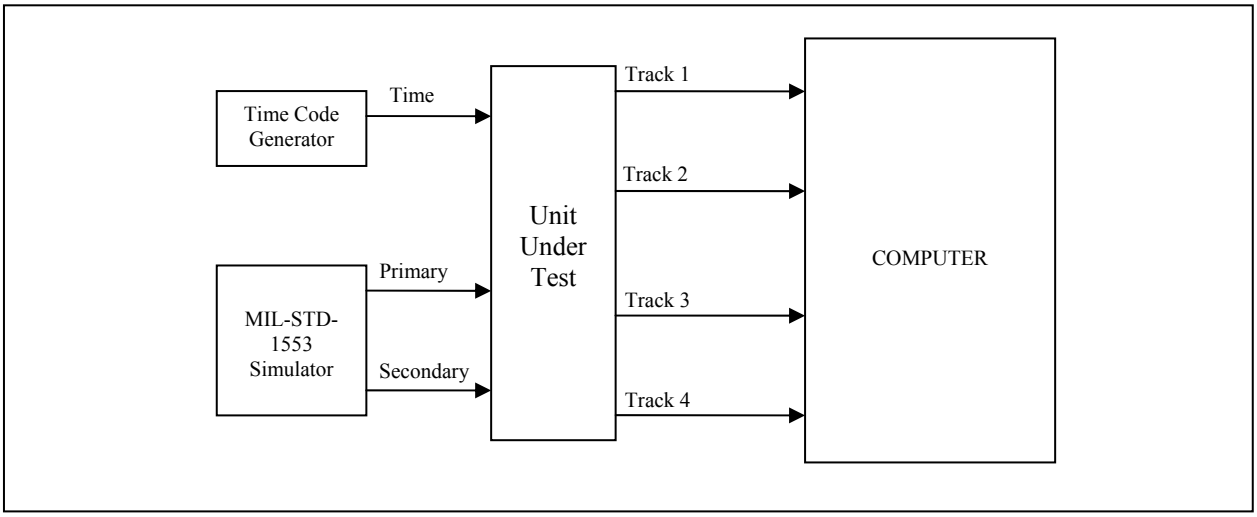

Figure 6-1a. PC-based test setup for track spread data.

6.2.3.2 Conditions.

6.2.3.2.1 Configure the MIL-STD-1553 simulator for several messages with known data such as counting. Use bus controller (BC)-to-remote terminal (RT), RT-to-BC, and RT-to-RT messages. If possible, simulate both the primary and secondary buses (A and B).

6.2.3.2.2 The UUT output bit rate must be high enough to avoid a buffer overflow.

6.2.3.2.3 Set decommutator for a frame sync pattern of FAF320, and set the appropriate frame length (between 128 and 256 words).

6.2.3.2.4 Set logic analyzer to trigger on the first word of the frame.

6.2.3.3 Procedure. Set UUT for 1, 2, 3, and 4 outputs (one at a time) and monitor data.

6.2.3.4 Data Reduction. After streams are merged and fill words are removed, data should be in original simulated order with the correct bus ID and correct word ID as specified in Chapter 8. The data words should match the simulated 1553 data. The first three words of the reconstructed frame are high, low, and microsecond time (if UUT is configured for frame time). All MIL-STD-1553 messages should consist of a command word followed by high, low, and microsecond time (if UUT is configured for message time tags). These words are followed by data, status, and response time (if configured for response time) words for a receive message; followed by status, response time, and data words for a transmit message; or followed by second command word, second status word, second response time, data, first status word, and first response time for an RT-to-RT message.

NOTE

Merging the streams can be done in hardware or software. In the case of hardware, if a data merger is not possible, as a minimum, verify that the first word on track 1 is high time, the first word on track 2 is low time, and the first word on track 3 is microsecond time, as described in Chapter 8. (The UUT must be configured for frame time for this test). In the case of software, create a format capable of capturing bus ID, word ID, message time tag (if used), command words, data words, status words, and response time for each message sent on the bus being monitored.

6.3 Composite Output Format Test

6.3.1 Purpose. This test verifies the format of the composite output of the UUT.

6.3.2 Test Equipment. MIL-STD-1553 simulator, time code generator, and a computer equipped for PCM data analysis or bit sync/decommutator and logic analyzer.

6.3.3 Test Method.

6.3.3.1 Setup. Connect the test equipment as shown in Figure 6-2(a).

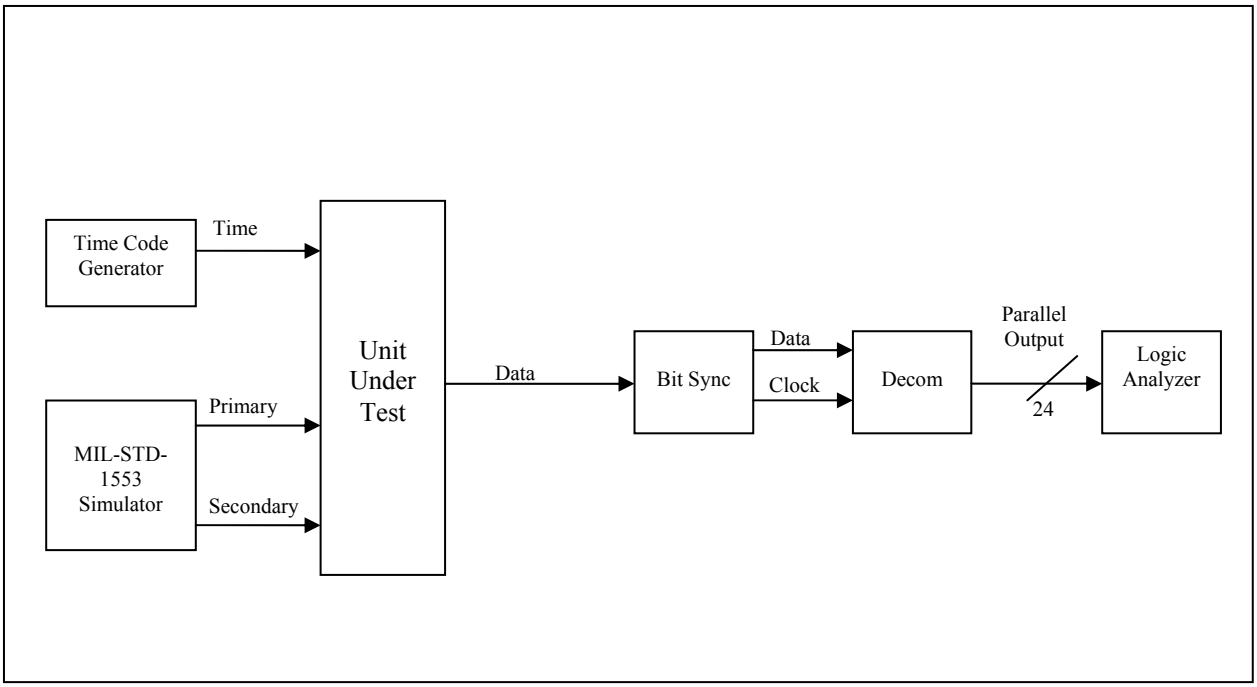

Figure 6-2. Hardware-based test setup for chapter 8 data.

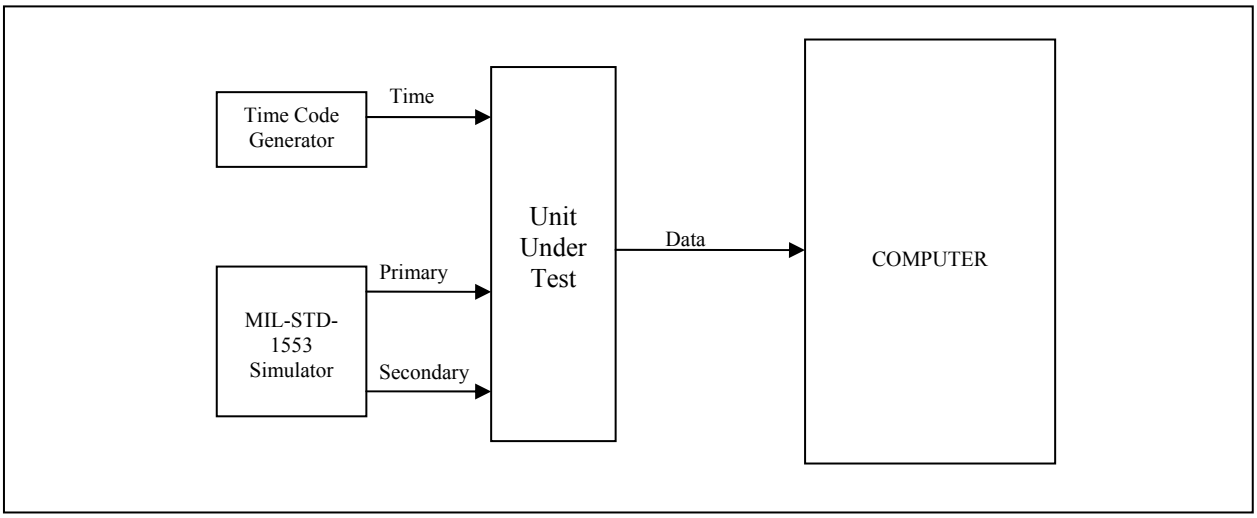

Figure 6-2a. PC-based test setup for chapter 8 data.

6.3.3.2 Conditions.

6.3.3.2.1 Configure the MIL-STD-1553 simulator for several messages with known data such as counting. Use BC-to-RT, RT-to-BC, and RT-to-RT messages. If possible, simulate both the primary and secondary buses (A and B).

6.3.3.2.2 The UUT output bit rate must be high enough to avoid a buffer overflow.

6.3.3.2.3 Set decommutator for a frame sync pattern of FAF320, and set the appropriate frame length (between 128 and 256 words).

6.3.3.2.4 Set logic analyzer to trigger on the first word of the frame. In the case of PC based PCM monitoring, create a format capable of capturing bus ID, word ID, message time tag (if used), command words, data words, status words, and response time for each message sent on the bus being monitored.

6.3.3.3 Procedure. Monitor composite output data.

6.3.3.4 Data Reduction. After fill words are removed, data from each separate bus input should be in original simulated order with the correct bus ID and correct word ID as specified in Chapter 8. The data words should match the simulated 1553 data. The first three words of the reconstructed frame are high, low, and microsecond time (if used). All MIL-STD-1553 messages should consist of a command word followed by high, low, and microsecond time (if used). These words are followed by data, status, and response time (if used) words for a receive message; followed by status, response time, and data words for a transmit message; or followed by second command word, second status word, second response time, data, first status word, and first response time for an RT-to-RT message.

6.4 Error Test

6.4.1 Purpose. This test verifies the UUT can identify and properly label a MIL-STD-1553 bus error.

6.4.2 Test Equipment. MIL-STD-1553 simulator, time code generator, and a computer equipped for PCM data analysis or bit sync/decommutator and logic analyzer.

6.4.3 Test Method.

6.4.3.1 Setup. Connect the test equipment as shown in Figure 6-2.

6.4.3.2 Conditions.

6.4.3.2.1 Configure the MIL-STD-1553 simulator for several messages with known data such as counting. Use BC-to-RT, RT-to-BC, and RT-to-RT messages. In one message, simulate an error (condition which violates the MIL-STD-1553 word structure) on the primary bus. In the following message, simulate an error on the secondary bus.

6.4.3.2.2 The UUT output bit rate must be high enough to avoid a buffer overflow.

6.4.3.2.3 Set decommutator for a frame sync pattern of FAF320, and set the appropriate frame length (between 128 and 256 words).

6.4.3.2.4 Set the logic analyzer to trigger on the command word of the first erroneous message.

6.4.3.3 Procedure. Monitor composite output data.

6.4.3.4 Data Reduction. Verify error words in the composite output for each bus input. Only errors which violate the definition of MIL-STD-1553 word structure such as synchronization, Manchester, parity, noncontiguous data word, and bit count/word errors should be flagged as errors. System protocol errors, for example, incorrect word count/message and illegal mode codes, should not be labeled as errors. An error word on the primary bus has a word ID of "C" and an error on the secondary bus has a word ID of "8."

NOTE

If the MIL-STD-1553 simulator does not have the capability to generate an error, simply switch the MIL-STD-1553 positive and negative inputs. Protocol errors should not generate an error indication.

6.5 Overflow Test

6.5.1 Purpose. This test verifies the UUT correctly identifies any buffer overflows.

6.5.2 Test Equipment. MIL-STD-1553 simulator, time code generator, and a computer equipped for PCM data analysis or bit sync/decommutator and logic analyzer.

6.5.3 Test Method.

6.5.3.1 Setup. Connect the test equipment as shown in Figure 6-2.

6.5.3.2 Conditions.

6.5.3.2.1 Configure the MIL-STD-1553 simulator for several messages with minimum inter-message gap (heavy bus loading).

6.5.3.2.2 Set UUT output bit rate for one bus low enough to generate a buffer overflow. Set composite output bit rate low enough to generate an overflow when all buses are merged.

6.5.3.2.3 Set decommutator for a frame sync pattern of FAF320 and the appropriate frame length (between 128 and 256 words).

6.5.3.2.4 Set logic analyzer to trigger on a word with a word ID for a buffer overflow (word ID = 0).

6.5.3.3 Procedure. Monitor composite output data.

6.5.3.4 Data Reduction. Verify overflow words in the composite output that have a bus ID of the individual bus that had a buffer overflow. Verify overflow words in the composite output that have a bus ID assigned to the composite output.

NOTE

The overflow word is the first word in the buffer after it becomes available. The word is an "extra" word not the next available piece of data.

6.6 User Word Test

6.6.1 Purpose. This test verifies the UUT correctly samples and formats the user word input.

6.6.2 Test Equipment. MIL-STD-1553 simulator, time code generator, and a computer equipped for PCM data analysis or bit sync/decommutator and logic analyzer.

6.6.3 Test Method.

6.6.3.1 Setup. Connect the test equipment as shown in Figure 6-2.

6.6.3.2 Conditions.

6.6.3.2.1 Generate one or more user words using the appropriate equipment. It is recommended that a data value be changed to verify proper update rate.

6.6.3.2.2 The UUT output bit rate must be high enough to avoid a buffer overflow.

6.6.3.2.3 Set decommutator for a frame sync pattern of FAF320 and the appropriate frame length (between 128 and 256 words).

6.6.3.2.4 Set logic analyzer to trigger on the a user word (word ID = 2 or 3).

6.6.3.3 Procedure. Monitor composite output data.

6.6.3.4 Data Reduction. Verify the user word (ID label = 2 or 3) is the correct value and is sampled at the proper rate.

6.7 Inter-message Gap Time Test

6.7.1 Purpose. This test verifies the UUT is capable of monitoring and formatting a MIL-STD-1553 stream that has the minimum inter-message gap between messages.

6.7.2 Test Equipment. MIL-STD-1553 simulator, time code generator, and a computer equipped for PCM data analysis or bit sync/decommutator and logic analyzer.

6.7.3 Test Method.

6.7.3.1 Setup. Connect the test equipment as shown in Figure 6-2.

6.7.3.2 Conditions.

6.7.3.2.1 Simulate MIL-STD-1553 messages with the minimum inter-message gap time. Use BC-to-RT, RT-to-BC, and RT-to-RT messages. Also simulate messages with no response. The inter-message gap time between a no-response message and the following message should be the no response time-out associated with the actual MIL-STD-1553 bus the UUT will be monitoring.

NOTE

The purpose of using no-response messages is to ensure that the following command word is recognized and tagged as a command word instead of a response word. Because command words and response words both have the same MIL-STD-1553 sync pattern (as opposed to a MIL-STD-1553 data word), it is necessary to verify the UUT will correctly identify a command word following a no-response message

6.7.3.2.2 The UUT output bit rate must be high enough to avoid a buffer overflow.

6.7.3.2.3 Set decommutator for a frame sync pattern of FAF320 and the appropriate frame length (between 128 and 256 words).

6.7.3.2.4 Set logic analyzer to trigger on the command word of the first message.

6.7.3.3 Procedure. Monitor composite output data.

6.7.3.4 Data Reduction. The MIL-STD-1553 data should be in original order with command words, data words, and status words tagged with the correct ID label.

NOTE

MIL-STD-1553A and MIL-STD-1553B have different inter-message gap time requirements.

6.8 Response Time Test

6.8.1 Purpose. This test verifies the UUT is capable of monitoring and formatting a MIL-STD-1553 stream that has messages with the minimum and maximum response time.

6.8.2 Test Equipment. MIL-STD-1553 simulator, time code generator, and a computer equipped for PCM data analysis or bit sync/decommutator and logic analyzer.

6.8.3 Test Method.

6.8.3.1 Setup. Connect the test equipment as shown in Figure 6-2.

6.8.3.2 Conditions.

6.8.3.2.1 Simulate MIL-STD-1553 messages with the minimum and maximum response time. Use BC-to-RT, RT-to-BC, and RT-to-RT messages.

> **NOTE**
>
> The purpose of using messages with the maximum response time is to ensure that the response word is recognized and tagged as a response word instead of a command word. Because command words and response words both have the same MIL-STD-1553 sync pattern (as opposed to a MIL-STD-1553 data word), it is necessary to verify the UUT will correctly identify a response word in a message with the maximum allowed response time

6.8.3.2.2 The UUT output bit rate must be high enough to avoid a buffer overflow.

6.8.3.2.3 Set decommutator for a frame sync pattern of FAF320 and the appropriate frame length (between 128 and 256 words).

6.8.3.2.4 Set logic analyzer to trigger on the command word of the first message.

6.8.3.3 Procedure. Monitor composite output data.

6.8.3.4 Data Reduction. Messages should be in the original order with the correct response time (ID label = 4) following the status word.

> **NOTE**
>
> MIL-STD-1553A and MIL-STD-1553B have different response time requirements.

6.9 Frame Time Format Test

6.9.1 Purpose. This test verifies the frame time format is correct.

6.9.2 Test Equipment. MIL-STD-1553 simulator, time code generator, and a computer equipped for PCM data analysis or bit sync/decommutator and logic analyzer.

6.9.3 Test Method.

6.9.3.1 Setup. Connect the test equipment as shown in Figure 6-2.

6.9.3.2 Conditions.

6.9.3.2.1 Simulate MIL-STD-1553 messages.

6.9.3.2.2 The UUT output bit rate must be high enough to avoid a buffer overflow.

6.9.3.2.3 Set decommutator for a frame sync pattern of FAF320, and set the appropriate frame length (between 128 and 256 words).

6.9.3.2.4 Set logic analyzer to trigger on the first word of the frame.

6.9.3.3 Procedure. Monitor composite output and individual bus outputs.

6.9.3.4 Data Reduction. Verify that the first 3 words in the frame are high time (ID label =7), low time (ID label = 6), and microsecond time (ID label = 5). Verify the time between each frame is correct for the bit rate and frame length selected.

NOTE

The time delta between frames for a 256-word frame: 6144 ÷ bit rate.

6.10 Binary Time Verification Test

6.10.1 Purpose. This test verifies the frame time is the correct binary value.

> **NOTE**
>
> This test is unnecessary if the MIL-STD-1553 simulator has a message time tagging capability. Simply verify that the 1553 message time tag from the simulator corresponds to the to the time tags of the matching message in the Chapter 8 data stream.

6.10.2 Test Equipment. MIL-STD-1553 simulator, time code generator with parallel output, and a computer equipped for PCM data analysis or bit sync/decommutator and logic analyzer decommutator, and logic analyzer/computer.

6.10.3 Test Method.

6.10.3.1 Setup. Connect the test equipment as shown in Figure 6-3(a).

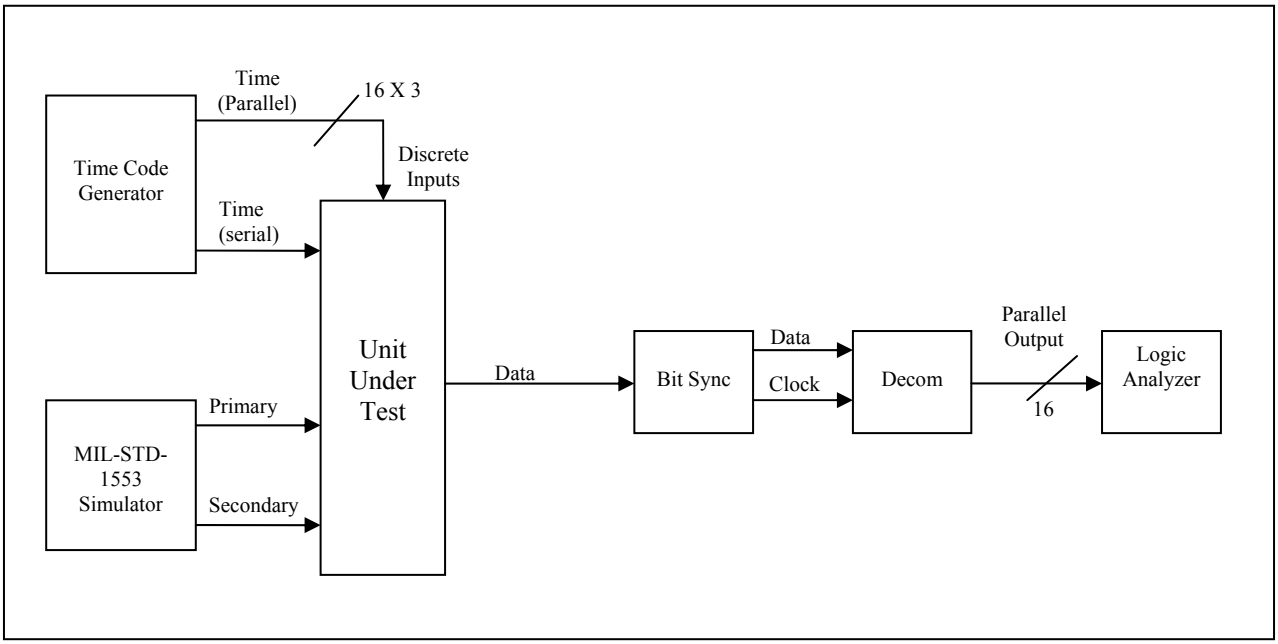

Figure 6-3. Hardware-based test setup for verifying IRIG time code accuracy.

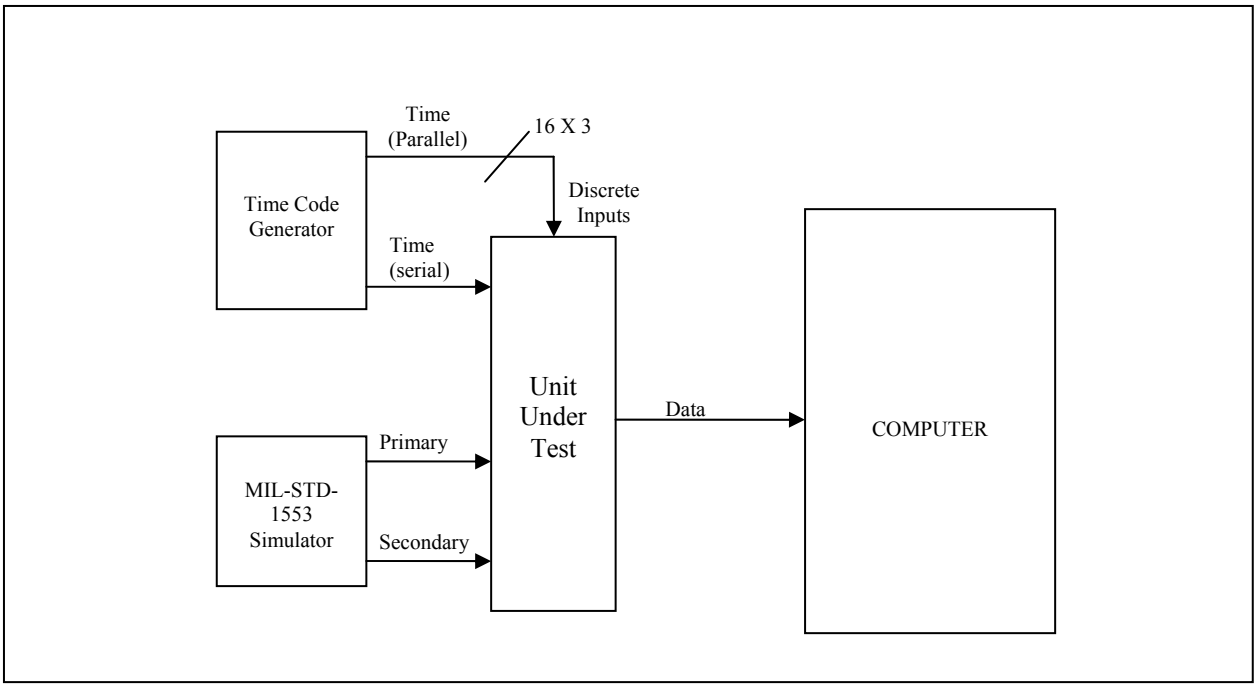

Figure 6-3a. PC-based test setup for verifying IRIG time code accuracy.

6.10.3.2 Conditions.

6.10.3.2 .1 Connect the parallel output of the time code generator to the user word inputs of three bus monitor modules.

6.10.3.2.2 The UUT output bit rate must be high enough to avoid a buffer overflow. Set user word sample rate as high as possible.

6.10.3.2.3 Set decommutator for a frame sync pattern of FAF320, and set the appropriate frame length (between 128 and 256 words).

6.10.3.2.4 Set logic analyzer to trigger on the first word of the frame.

6.10.3.3 Procedure. Monitor composite output.

6.10.3.4 Data Reduction. First ensure that frame time corresponds to that which is output by the IRIG time source. Compare frame time with the user word time in each output stream. The time delta between the frame time and the user word following it should be 24 times the number of words between divided by the output bit rate. User words should show time incrementing according to the output bit rate.

6.11 Message Time Tag Test

6.11.1 Purpose. This test verifies message time tags.

6.11.2 Test Equipment. MIL-STD-1553 simulator, time code generator, decommutator, and logic analyzer/computer.

6.11.3 Test Method.

6.11.3.1 Setup. Connect the test equipment as shown in Figure 6-2.

6.11.3.2 Conditions.

6.11.3.2.1 Simulate a MIL-STD-1553 frame of known length and inter-message gap time.

6.11.3.2.2 The UUT output bit rate must be high enough to avoid a buffer overflow.

6.11.3.2.3 Set decommutator for a frame sync pattern of FAF320, and set the appropriate frame length (between 128 and 256 words).

6.11.3.2.4 Set logic analyzer to trigger on the first word of the frame.

6.11.3.3 Procedure. Monitor composite output.

6.11.3.4 Data Reduction. Messages should have identical time tags on all buses. The time between occurrences of any one message should be the MIL-STD-1553 frame rate. Time tags should be latched so that they cannot be updated until all three have been read.

NOTE

It is important during this test to find a message that occurs when microsecond time rolls over. Verify that the microsecond time tag corresponds to the low order and high order tags and does not exhibit time rollback.

This page intentionally left blank.

CHAPTER 7

COMMON AIRBORNE INSTRUMENTATION SYSTEM (CAIS) BUS INTERFACE

7.1 General

This chapter provides the user with a methodology to verify the CAIS Bus Interface basic functional performance of Data Acquisition Units (DAUs) designed to conform to the Common Airborne Instrumentation System bus interface standard.

The tests described in this chapter are not all-inclusive, but are limited to the more critical CAIS Bus interface functional requirements. Additional tests needed to fully characterize any specific equipment are particular to the function of that data acquisition unit or controller and beyond the scope of this chapter.

NOTE

These tests are structured as methodologies since the specifics of each are peculiar to the test equipment available and the make and model of the unit under test (UUT). The user is assumed to have a working knowledge of the test equipment and the CAIS Bus.

7.2 Functional Check Test

7.2.1 Purpose. This test verifies that CAIS bus interface to data acquisition units function properly using the CAIS protocols.

7.2.2 Test Equipment. CAIS controller, computer (configured with a serial port compatible with the CAIS hardware (RS-232, USB, CAIS BUS, etc.), loaded with vendor specific software supporting the CAIS controller/DAU's System Configuration Query, PCM bit synchronizer and decommutator), MIL-STD-1553B cables, and terminators.

7.2.3 Test Method.

7.2.3.1 Setup. Connect a CAIS Bus Controller Unit to DAUs (as Shown in Figure 7-1 or Figure 7-2)

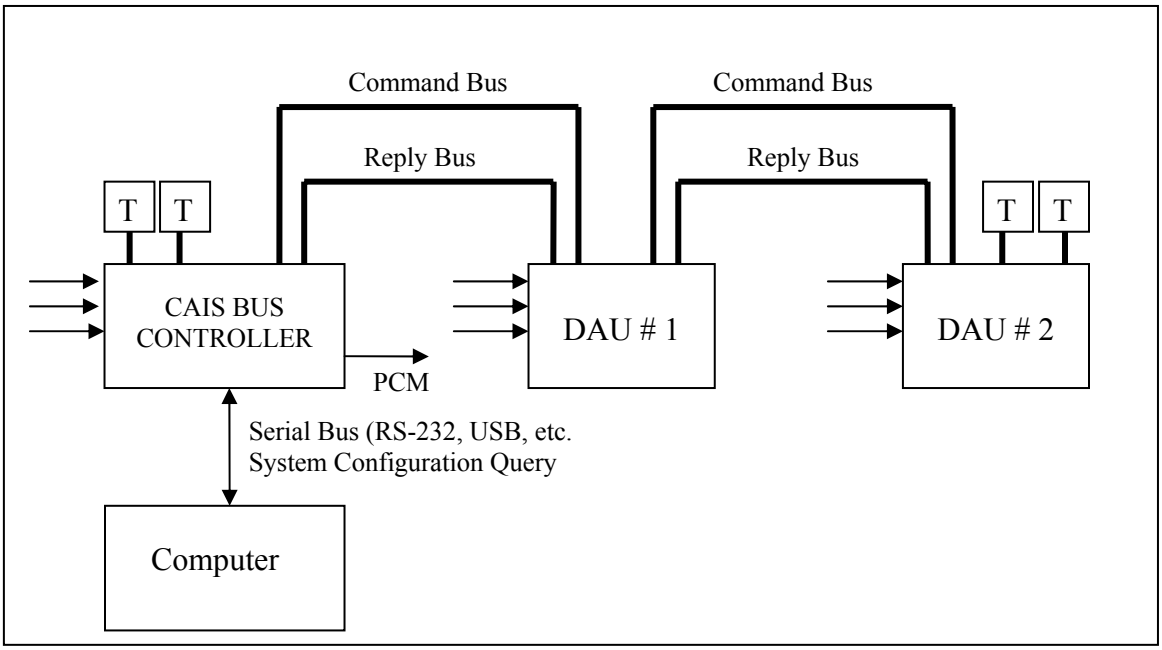

Figure 7-1. Single CAIS Bus Configuration.

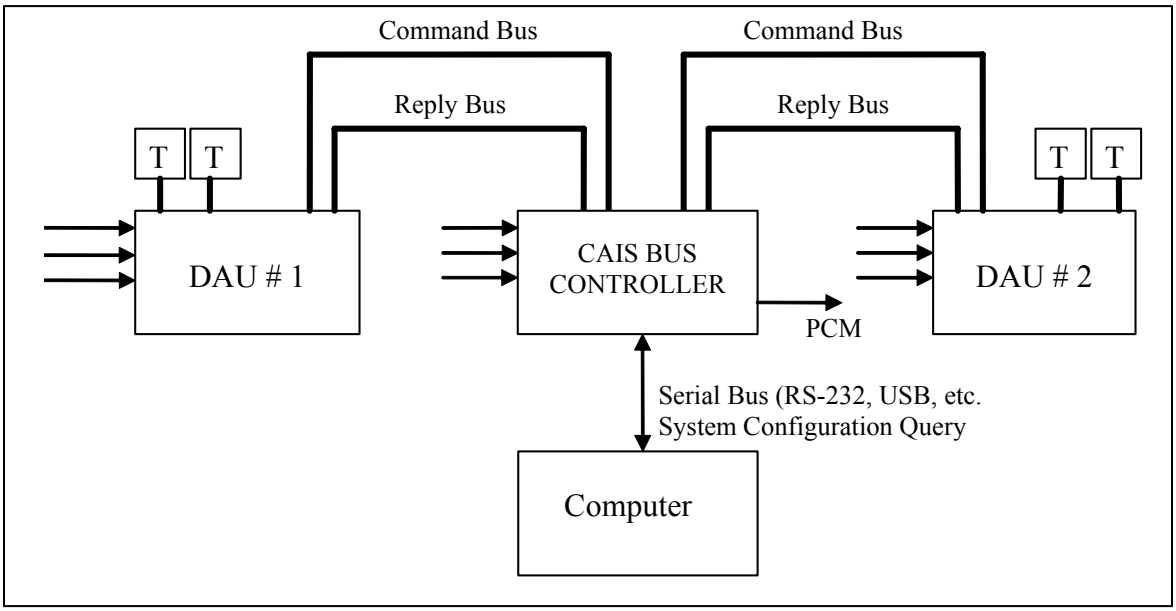

Figure 7-2. Split CAIS bus configuration.

NOTE

Terminator Values are Z_o (Nominal Characteristic Impedance of selected cable) with a tolerance of ±2%. The Z_o of selected cable must be with in the range of 73Ω to 83Ω at a sinusoidal frequency of 10MHz (recommend MIL-STD-1553B cables and a terminator value 78Ω).

7.2.3.2 Conditions.

7.2.3.2.1 Set unit IDs for the CAIS Bus Controller (Master) and DAU's – Units Under Test (Remote) per the hardware vendor's instructions.

7.2.3.2.2 Program the CAIS Bus Controller unit for this configuration.

7.2.3.3 Procedure. Check the configuration of the system by placing the system in Configuration Mode. (See Figure 7-3 and Figure 7-4.).

7.2.3.4 Data Reduction. This is a functional go / no-go test and quantitative data are not collected.

7.3 References

a. CAIS Bus Standard Interface A00.00-C001 Rev B.
b. CAIS Bus Validation Test Plan A00.00-C010.

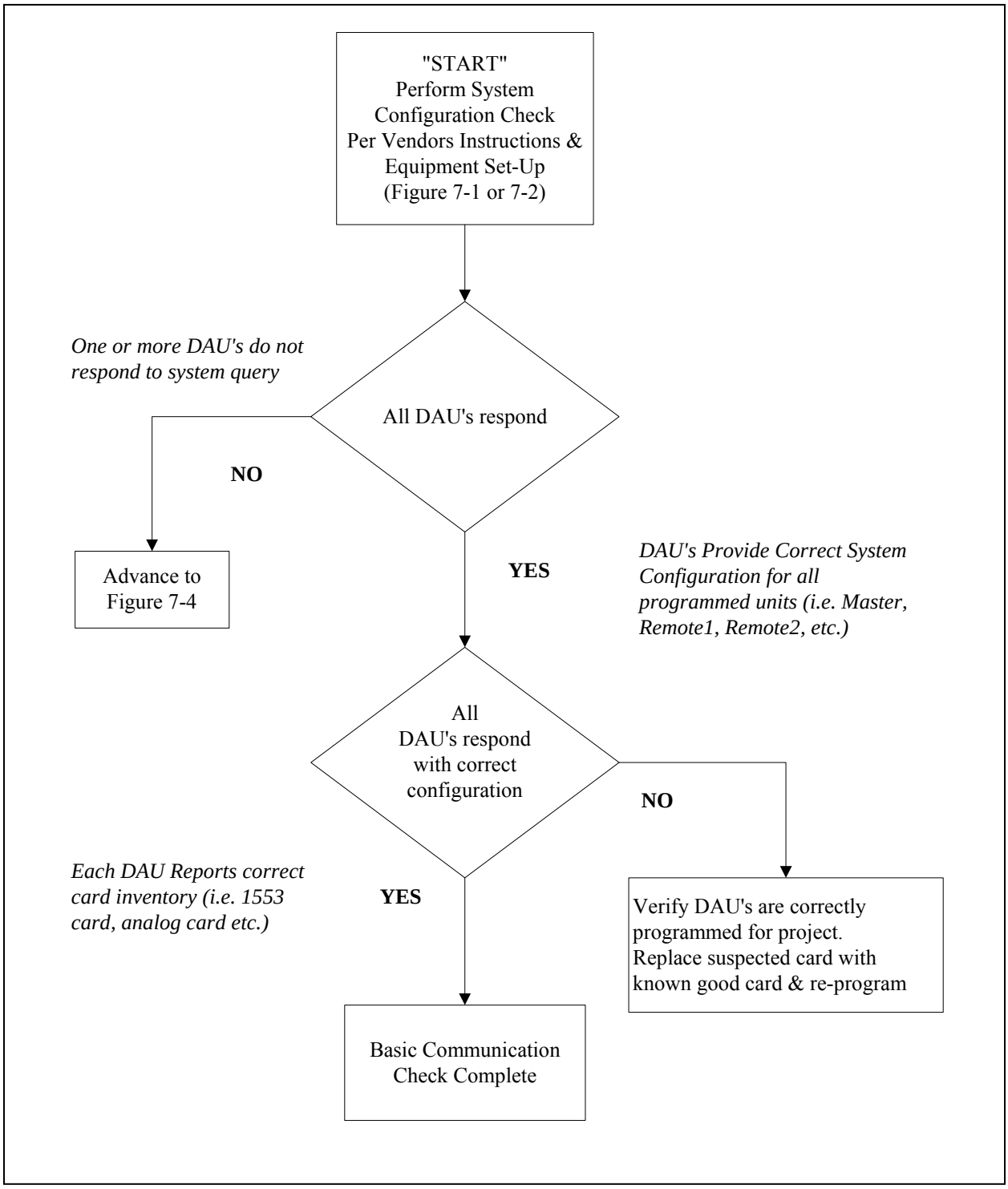

Figure 7-3. Configuration check flow diagram (1/2).

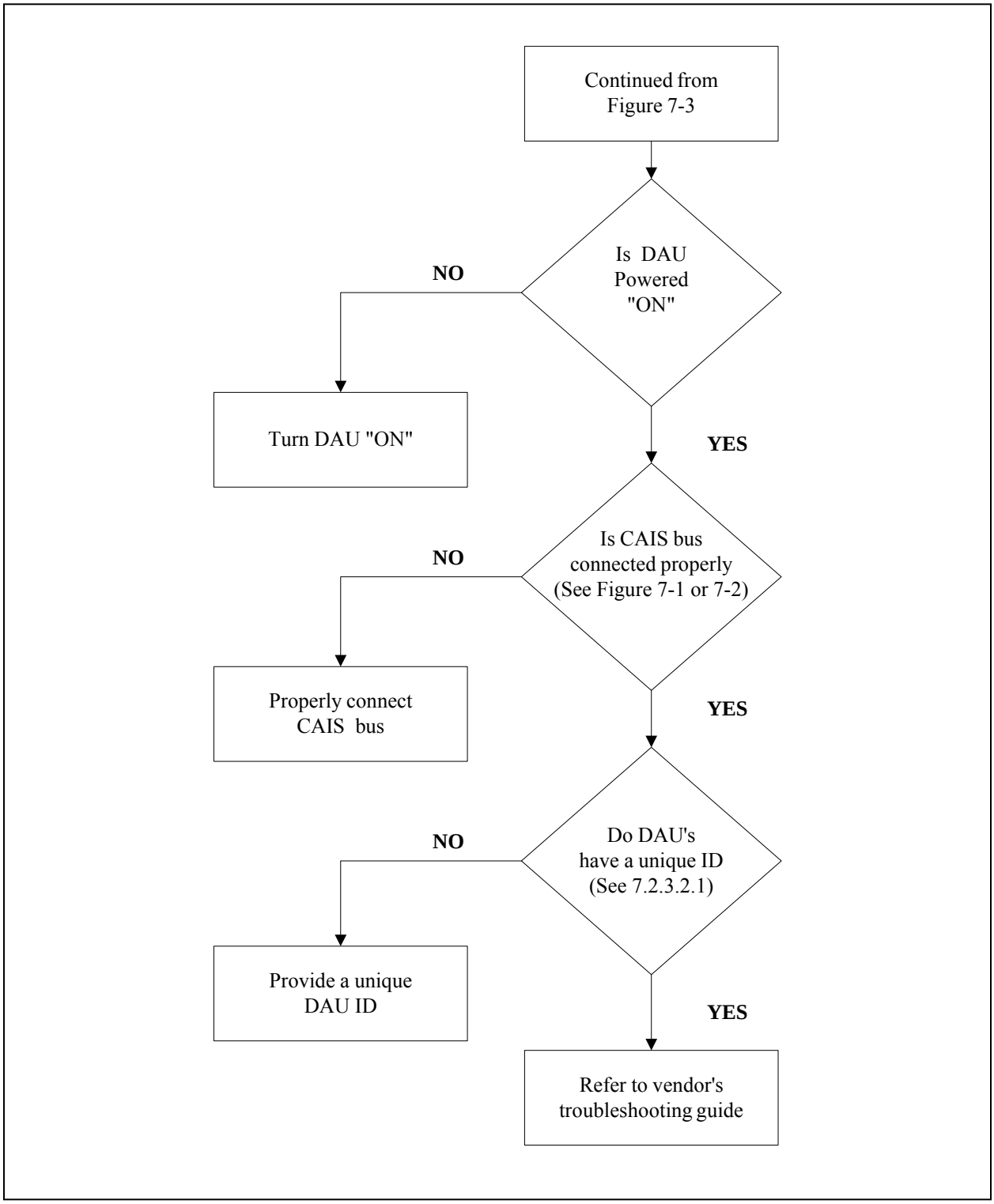

Figure 7-4. Configuration Check Flow Diagram (2 / 2).

This page intentionally left blank.

APPENDIX A

AVAILABLE TRANSDUCER DOCUMENTATION

1.1 Documentation

Documentation covering general and specific transducer types has been published by many sources. Additional documentation is constantly being prepared or updated. Since the content of these documents is subject to continuing review, users are urged to contact the responsible organization for current editions. The following paragraphs contain references to documents pertaining to transducers with electrical outputs and are provided as a guide to a variety of available materials. The referenced documents are not intended to be all-inclusive. The following categories are linked to the associated paragraph within this Appendix.

1.2 Websites
1.3 Accelerometers and Vibration
1.4 Fluid Velocity
1.5 Microphones and Sound Power
1.6 Pressure Transducers
1.7 Rate Gyros
1.8 Thermocouples
1.9 Displacement
1.10 Strain Gages
1.11 Voltage and Current Sensors
1.12 Miscellaneous

1.2 Websites

The following Websites are listed as references for the standards found here;

ISA - Web Site - http://www.isa.org
ANSI Web Site - http://www.ansi.org
IEEE Web Site - http://www.ieee.org
ASME Web Site - http://www.asme.org
ASTM Web Site - http://www.astm.org
IEC Web Site - http://www.iec.org/
National Instruments Web Site - http://www.ni.com/
ASA (Acoustical Society of America) - http://asa.aip.org/
Flow Technologies Inc. Web Site - http://www.ftimeters.com/
Installation and calibration Manuals - http://www.msiusa.com/
Guide to Strain Gage Technology" - http://www.vishay.com/
Multiple technical papers relating to accelerometers, strain gages, servo types, variable capacitive, piezoelectric, piezoresistive - http://www.endevco.com/

1.3 Accelerometers and Vibration

ANSI S2.11-1969 (R1997), American National Standard for the Selection of Calibrations and Tests for Electrical Transducers Used for Measuring Shock and Vibration.

ANSI S2.17-1980 (R1997) Machinery Vibration Measurement

ANSI S2.2-1959 (R2001) Methods for the Calibration of shock and Vibration Pickup.

ANSI/ ISA-37.5-1982 - (R1995), Specifications and Tests for Strain Gage Linear Acceleration Transducers

IEEE Std 337 - 1972, IEEE Standard Specification Format Guide and Test Procedure for Linear, Single-Axis, Pendulous, Analog Torque Balance Accelerometers.

IEEE Std 1293-1998, IEEE standard specification format guide and test procedure for linear, single-axis, nongyroscopic accelerometers

ISA-RP37.2-1982 - (R1995), Guide for Specifications and Tests for Piezoelectric Acceleration Transducers for Aerospace Testing.

1.4 Fluid Velocity

ASME MFC-6M-1998, Measurement Of Fluid Flow In Pipes Using Vortex Flowmeters

FTI Flow Technologies, Turbine Flowmeter Installation, 2003

FTI Flow Technologies, Universal Viscosity Curves, 2003

Ron Madison. "Turbine Flowmeters will never be the same" Measurements & Controls (Feb1997)

Ron Madison. "Modern Electronics meet Turbine Flowmeters" Measurements & Controls (Apr 1995)

Steve Hope. "Calibration: Heart of Flowmeter Accuracy" INTECH, (Apr 1994)

1.5 Microphones and Sound Power

ANSI S1.1-1994 (R2004), Acoustical Terminology.

ANSI S1.10-1966 (R2001), USA Standard Method for Calibration of Microphones.

ANSI S1.15-1997, USA Standard Specifications for Laboratory Standard Microphones.

ANSI S1.4-1983 (R 2001)/with Amd S1.4A-1995, Specification for Sound Level Meters.

ANSI S1.40-1984 (R2001), American National Standard Specification for Acoustical Calibrators.

ANSI S1.9-1996 (R2001), American National Standard Instruments for the Measurement of Sound Intensity.

ANSI S12.12-1992 (R2002), Engineering Method for the Determination of Sound Power Levels of Noise Sources Using Sound Intensity

ANSI S12.30 – 1990 (2002), Guidelines for Use of Sound Power Standards and for the Preparation of Noise Test Codes.

ANSI S12.35 – 1990 (R1996), Precision Methods for Determination of Sound Power Levels of Noise Sources in Anechoic and Hemi-Anechoic Rooms.

ANSI S12.5-1990 (R1997), American National Standard Requirements for the Performance and Calibration of Reference Sound Sources.

ANSI S12.50 - 1990, Survey Methods for Determination of Sound Power Levels of Noise Sources

ANSI S12.51 - 1990, Engineering Methods for Determination of Sound Power Levels of Noise Sources in a Special Reverberation Test Room.

ANSI S12.54 – 1988 (R1999), Engineering Methods for Determination of Sound Power Levels of Noise Sources for Essentially Free-Field Conditions Over a Reflecting Plane. ASME PTC 36 (1985), Measurement of Industrial Sound.

IEC 61043 Ed. 1.0b (1993), Electroacoustics - Instruments for the measurement of sound intensity - Measurements with pairs of pressure sensing microphones.

ISO 1683 -1983 American National Standard Preferred Reference Quantities for Acoustical Levels.

1.6 Pressure Transducers

ANSI/ASHRAE 41.3-1989, Method for Pressure Measurement.

ANSI/ASME MC88-1-1972 (R1987), A Guide for the Dynamic Calibration of Pressure Transducers.

ANSI/ASME PTC 19.2 - 1987, Pressure Measurements: Instruments and Apparatus.

ANSI/ ISA-37.3-1982 - (R1995), Specifications and Tests for Strain Gage Pressure Transducers.

ANSI/ISA S37.6-1982 (R1995), Specifications and Tests for Potentiometric Pressure Transducers.

ANSI/ISA-37.10-1982 - (R1995), Specifications and Tests for Piezoelectric Pressure and Sound-Pressure Transducers Pressure and Sound-Pressure Transducers.

1.7 Rate Gyros

ANSI/IEEE No. 292 - 1969, IEEE Specification Format for Single-Degree-of- Freedom Spring-Restrained Rate Gyros.

ANSI/IEEE No. 293 - 1996, IEEE Test Procedure for Single-Degree-of- Freedom Spring-Restrained Gyros.

ANSI/IEEE No.647-1995, IEEE Standard Specification Format Guide and Test Procedure for Single-Axis Laser Gyros.

IEEE No.517-1974, IEEE Standard Specification Format Guide and Test Procedures for Single-Degree-of-Freedom Rate Integrating Gyros.

IEEE No.529-1980, Supplement for Strapdown Applications to IEEE Standard Specification Format Guide and Test Procedures for Single-Degree-of-Freedom Rate Integrating Gyros.

IEEE No.671-1985, IEEE Standard Specification Format Guide and Test Procedure for Nongyroscopic Inertial Angular Sensors: Jerk, Acceleration, Velocity, and Displacement.

IEEE No.813-1988, IEEE Specification Format Guide and Test Procedure for Two-Degree-of-Freedom Dynamically Tuned Gyros.

IEEE No.952-1997, IEEE Standard Specification Format Guide and Test Procedure for Single-Axis Interferometric Fiber Optic Gyros.

1.8 Thermocouples

ASTM D6176M-97, Standard Practice for Measuring Surface Atmospheric Temperature with Electrical Resistance Temperature Sensors (Metric

ASTM E220-02, Standard Test Method for Calibration of Thermocouples By Comparison Techniques.

ASTM E230-03, Standard Specification and Temperature-Electromotive Force (EMF) Tables for Standardized Thermocouples.

ASTM E235-88 (1996)e1, Thermocouples, Sheathed, Type K, for Nuclear or for Other High Reliability Applications.

ASTM E344-02, Terminology Relating to Thermometry and Hydrometry.

ASTM E608/E608M-00, Standard Specification for Mineral-Insulated, Metal-Sheathed Base-Metal Thermocouples.

ASTM E633-00, Standard Guide for Use of Thermocouples in Creep and Stress-Rupture Testing to 1800°F (1000°C) in Air.

ASTM E639-78 (2002), Standard Test Method for Measuring Total-Radiance Temperature of Heated Surfaces Using a Radiation Pyrometer.

ASTM E644-02, Standard Test Methods for Testing Industrial Resistance Thermometers

ASTM E696-00, Standard Specification for Tungsten-Rhenium Alloy Thermocouple Wire.

ASTM E780-92 (1998), Standard Test Method for Measuring the Insulation Resistance of Sheathed Thermocouple Material at Room Temperature.

ASTM E839-96, Standard Test Methods for Sheathed Thermocouples and Sheathed Thermocouple Material.

ASTM E988-96 (2002), Standard Temperature-Electromotive Force (EMF) Tables for Tungsten-Rhenium Thermocouples.

ASTM E1137-97, Standard Specification for Industrial Platinum RESISTANCE Thermometers.

ASTM E1159-98, Standard Specification for Thermocouple Materials, Platinum-Rhodium Alloys, and Platinum.

ASTM E1252-98 (2002), Standard Practice for General Techniques for Obtaining Infrared Spectra for Qualitative Analysis.

ASTM E1350-97 (2001), Standard Test Methods for Testing Sheathed Thermocouples Prior to, During, and After Installation .

ASTM E1655-00, Standard Practices for Infrared Multivariate Quantitative Analysis.

ASTM E1862-97 (2002)e1, Standard Test Methods for Measuring and Compensating for Reflected Temperature Using Infrared Imaging Radiometers.

IEC 60584-1 Ed. 2.0 b: 1995, Thermocouples - Part 1: Reference tables

IEC 60584-2 Ed. 1.0 b: 1982, Thermocouples - Part 2: Tolerances

IEC 60584-3 Ed. 1.0 b: 1989, Thermocouples. Part 3: Extension and compensating cables - Tolerances and identification system Check: RTD's (resistance temperature detector), IR thermometers, pyrometers.

IEC 61224 Ed. 1.0 b:1993, Nuclear reactors - Response time in resistance temperature detectors (RTD) - In situ measurements.

ISA MC96.1-1982 Temperature Measurement Thermocouples.

ISO 8056-1:1985 Aircraft - Nickel-chromium and nickel-aluminium thermocouple extension cables - Part 1: Conductors - General requirements and tests.

ISO 8056-2:1988 Aircraft - Nickel-chromium and nickel-aluminium thermocouple extension cables - Part 2: Terminations - General requirements and tests.

ISO 8056-3:1987 Aircraft - Nickel-chromium and nickel-aluminium thermocouple extension cables - Part 3: Crimp-type ring terminal ends – Dimensions.

ISO 8056-4:1987 Aircraft - Nickel-chromium and nickel-aluminium thermocouple extension cables - Part 4: Crimp-type butt connectors – Dimensions.

1.9 Displacement

IEEE Std 671-1985 IEEE Standard Specification Format Guide And Test Procedure For Nongyroscopic Inertial Angular Sensors Jerk, Acceleration, Velocity, And Displacement.

ISA S37.12-1982 (R1995), Specifications and Tests for Potentiometric Displacement Transducers.

Measurement Techniques, April 2003, vol. 46, no. 4, pp. 337-342(6) Displacement Transducers.

1.10 Strain Gages

ASTM E1319-98(2003) Standard Guide for High-Temperature Static Strain Measurements.

ISA-37.8-1982 - (R1995), Specifications and Tests for Strain Gage Force Transducers.

1.11 Voltage and Current Sensors

Measurement, June 1995, vol. 15, no. 3, pp. 165-168(4): Pacholski K. The high-speed overloading error of voltage transducers.

1.12 Miscellaneous

E556-95 (2000) Standard Test Method for Calibrating a Wheel Force or Torque Transducer Using a Calibration Platform.

IEST-RP-DTE012.1 – 1995. "Handbook for Dynamic Data Acquisition and Analysis," ISBN 1-877862-47-9

ISA - 1992, "Measurement Uncertainty," ISBN-55617-126-9.

ISA - 1995, "Smart Sensors," ISBN 1-55617-575-2.

ISA - 1997, Standards and Recommended Practices for Instrumentation and Control, 13th Edition.

ISA - 1997, Comprehensive Dictionary of Measurement and Control, Third Edition.

APPENDIX B

PRESSURE TRANSDUCER THERMAL TRANSIENT TEST

1.1 Pressure Transducer: Thermal Transient Test

This procedure has been developed for applying short duration thermal transients to pressure transducers and observing the effects of these transients on transducer performance. The intent is to screen transducers for their application to pressure measurement in studies of explosions, ballistics, reentry vehicles, and similar applications. Two techniques have been identified to produce the necessary thermal transients. The first technique consists of exposing the pressure transducer to thermal radiation resulting from the ignition of a photographic flashlamp and monitoring the resultant transducer output. Because photographic flashbulbs are becoming difficult to locate, a second technique is offered here. The second technique consists of exposing the pressure transducer to thermal radiation resulting from a propane blowtorch flame that is interrupted by a rotating slotted disk.

1.2 Flashlamp Test

The following subparagraphs describe the apparatus and technique to perform a thermal transient test when a photographic flashlamp is used as the heat source.

1.2.1 Equipment. The major items of equipment needed for this test procedure are described in detail in the following subparagraphs.

1.2.1.1 Basic Hardware. Figure B-1 shows the setup used for the thermal transient test procedure for pressure transducers. It consists of the transducer and the flashlamp fixtures mounted on a common base. The flashlamp is mounted in a vertical position on a lamp support, which is held in a slide block. The transducer to be tested is mounted in a brass cylinder with the diaphragm flush with the front of the cylinder. The slide block may be moved along the base to vary the distance between the transducer and the flashlamp, as indicated on the scale mounted on the base. The lamp support can be rotated and adjusted vertically so that the center of the flashlamp is at the same height as the center of the diaphragm of the transducer under test. The dry cells provide power for the flashlamps that are activated by a push-button switch at the end of the cable. Dimensional and material details are given in Figure B-2 through Figure B-9.

Figure	Title	Figure	Title
B-1	Thermal transient test apparatus.	B-6	Transducer mounting plug.
B-2	Base.	B-7	Flashlamp slide block.
B-3	Transducer fixture support.	B-8	Lamp support (large).
B-4	Transducer fixture (brass)	B-9	Lamp support (small).
B-5	Glass retaining ring.	B-10	Test setup for transient thermal shock testing of sensors using a slotted, rotating disk and a heat source equivalent to measurement application.

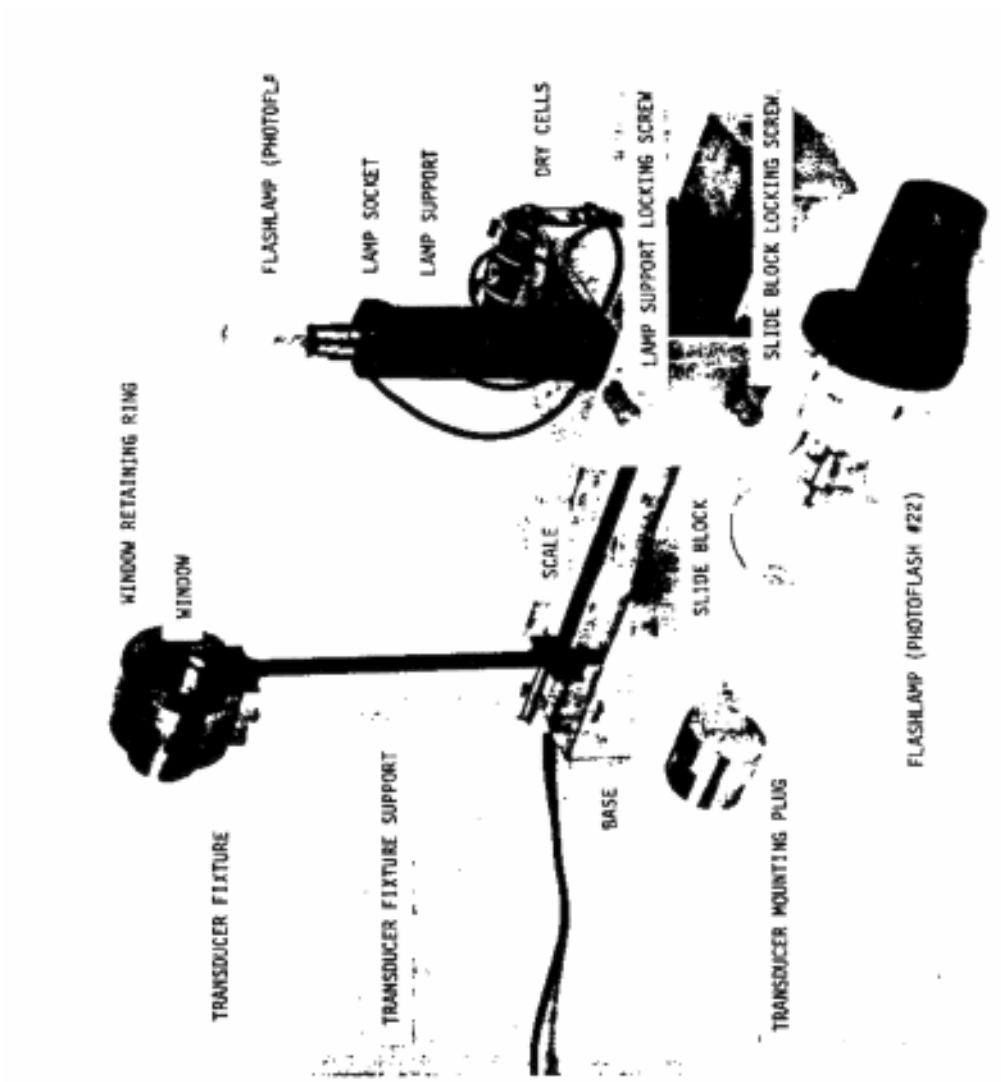

Figure B-1. Thermal transient test apparatus.

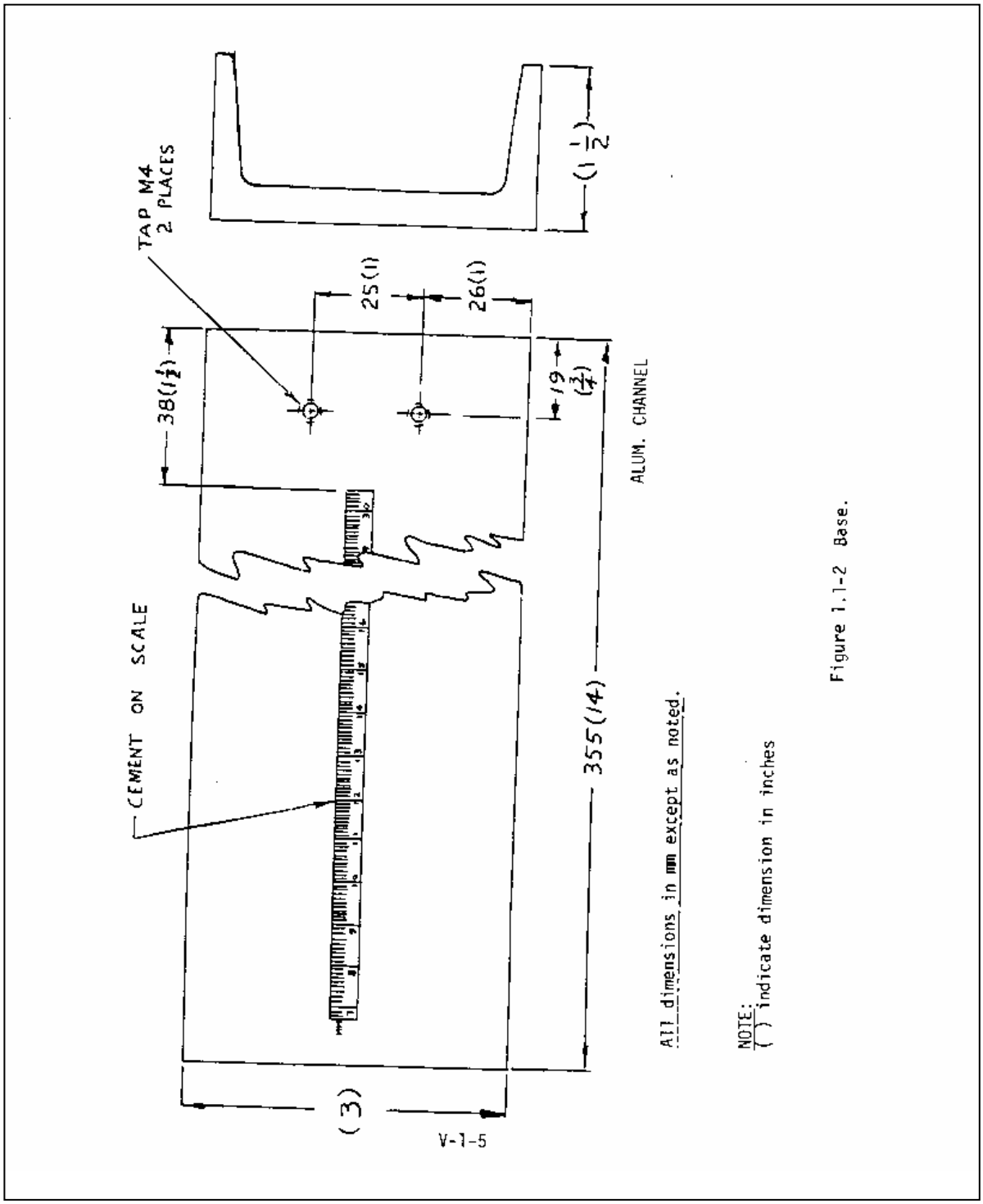

Figure B-2. Base.

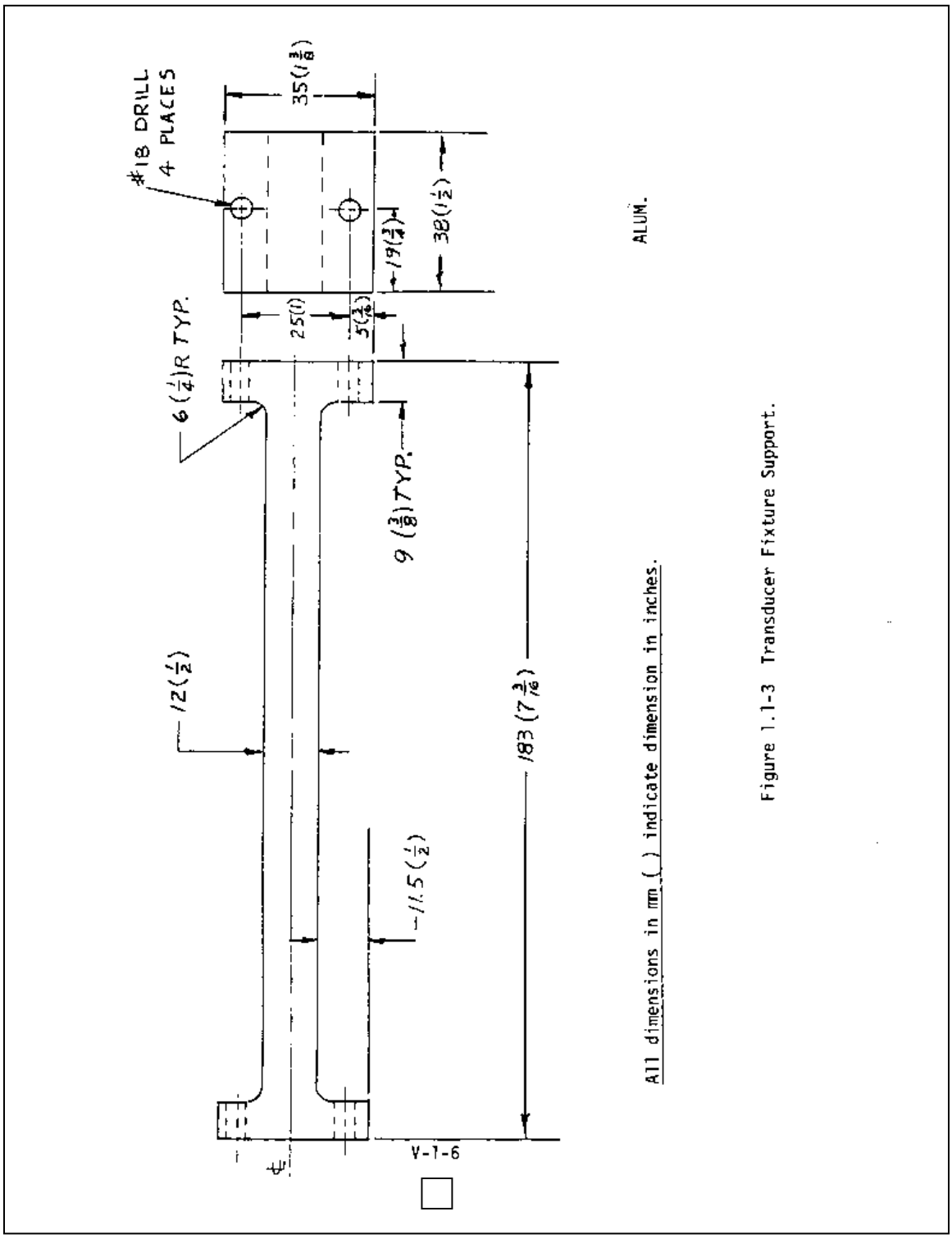

Figure B-3. Transducer fixture support.

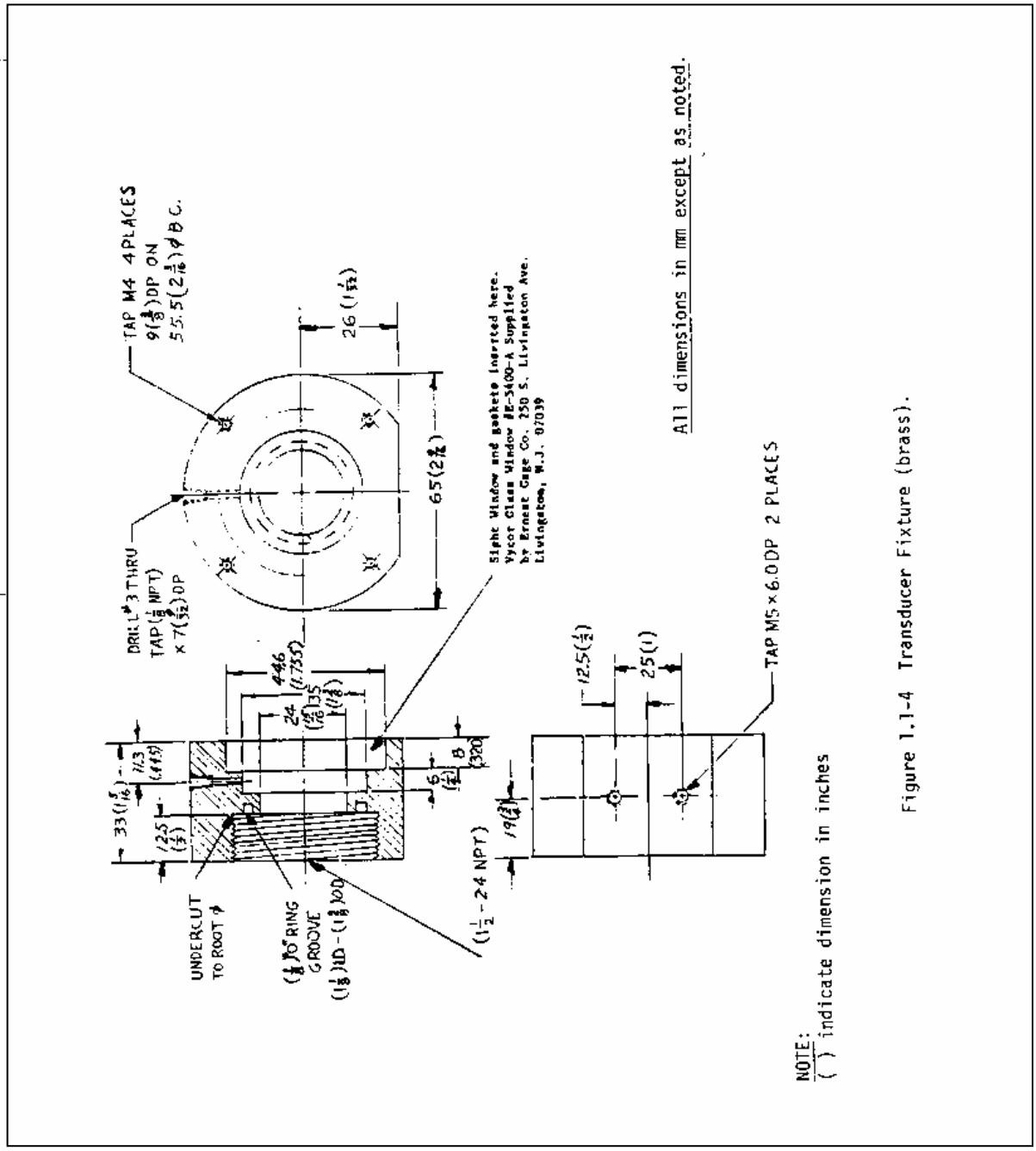

Figure B-4. Transducer fixture (brass).

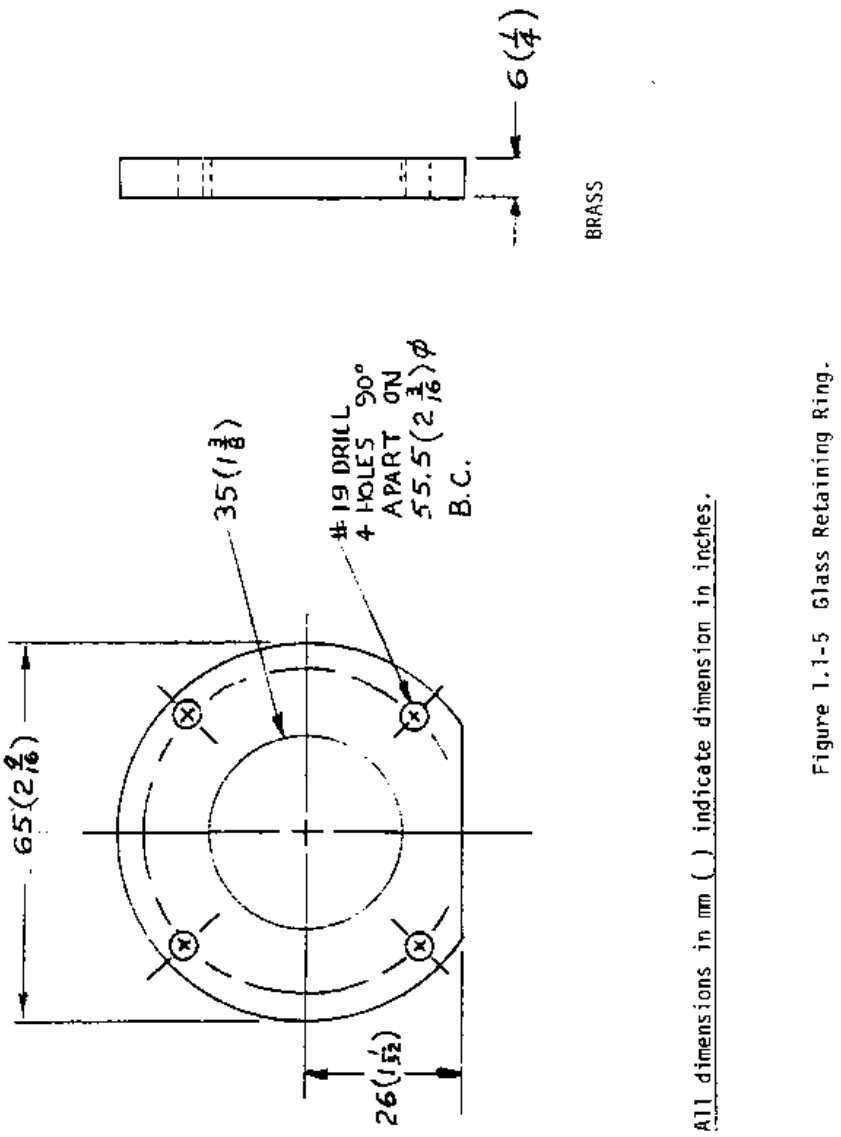

Figure B-5. Glass retaining ring.

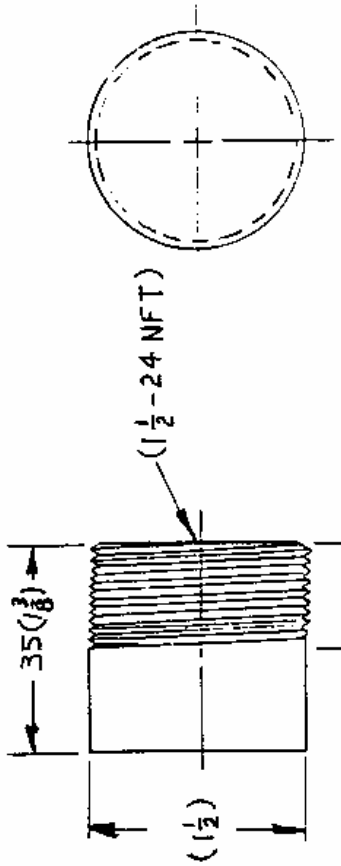

BRASS

All dimensions in mm except as noted.

NOTE:
( ) indicate dimension in inches

Figure 1.1-6 Transducer Mounting Plug.

Figure B-6. Transducer mounting plug.

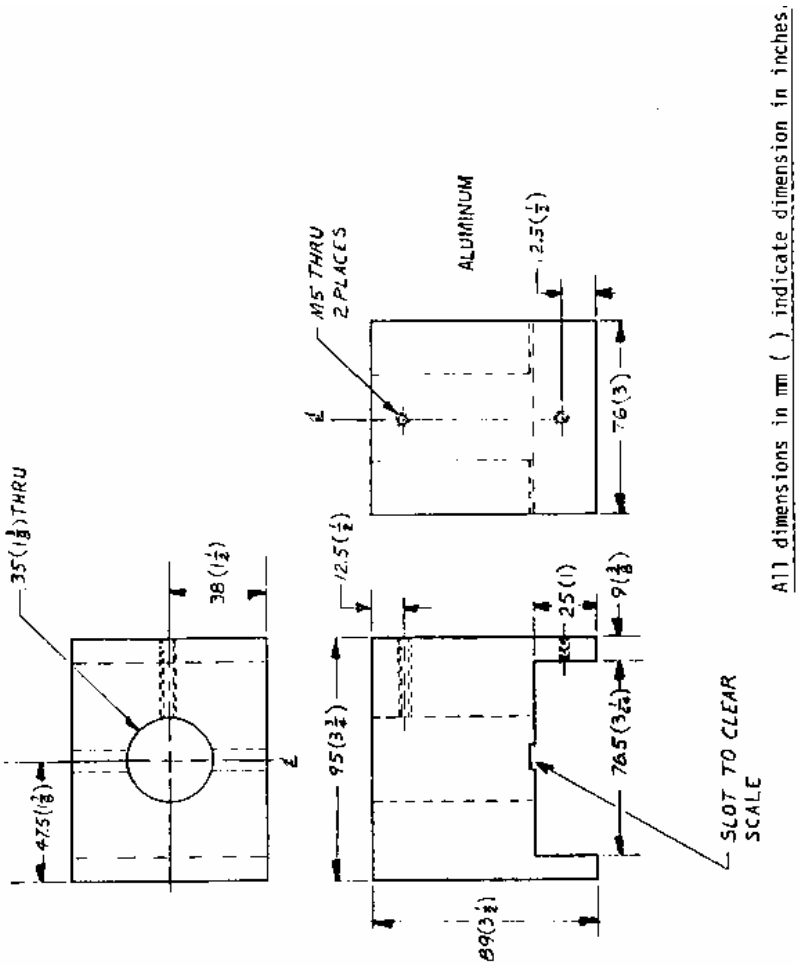

Figure 1.1-7 Flashlamp Slide Block.

Figure B-7. Flashlamp slide block.

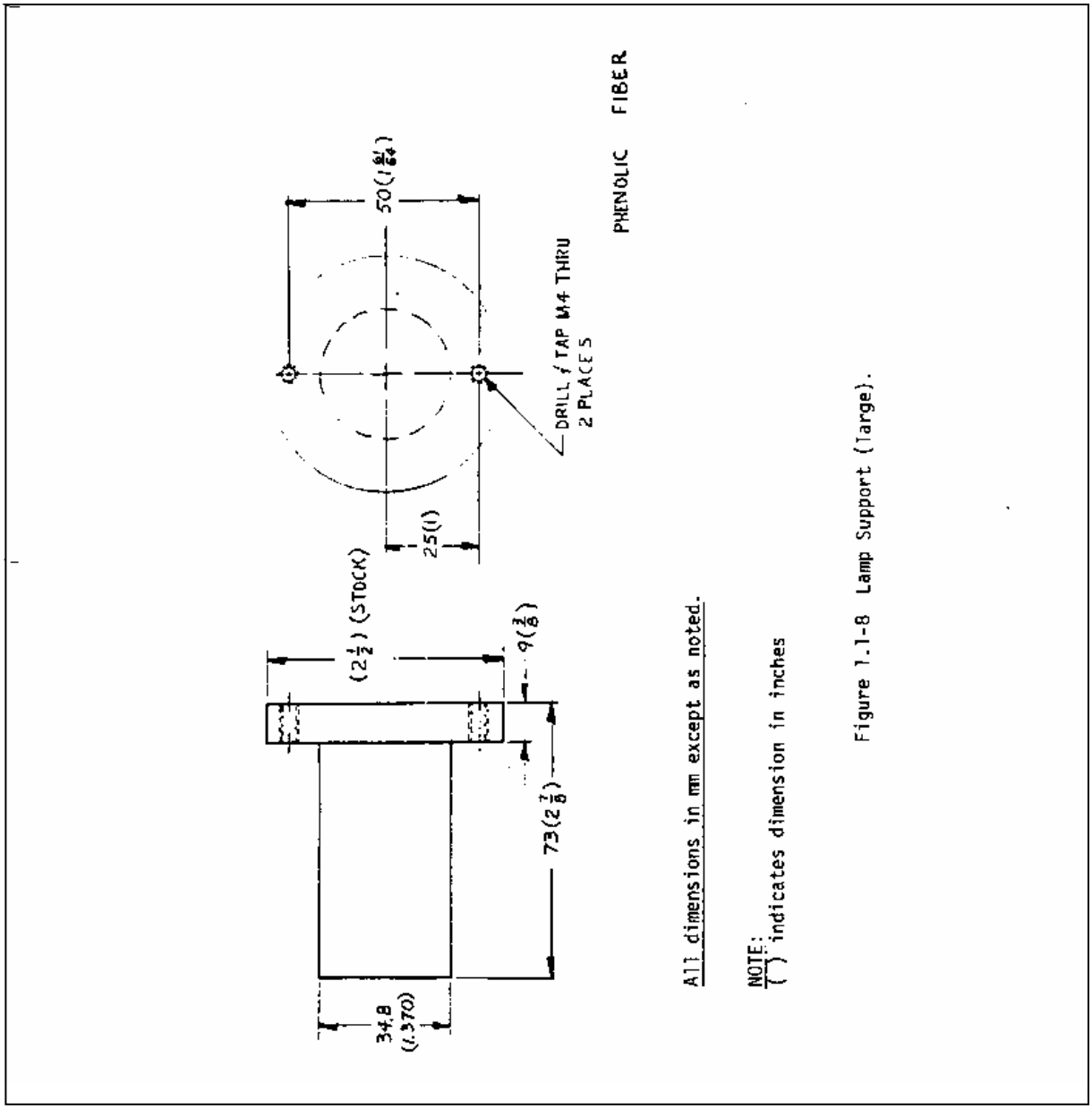

Figure B-8. Lamp support (large).

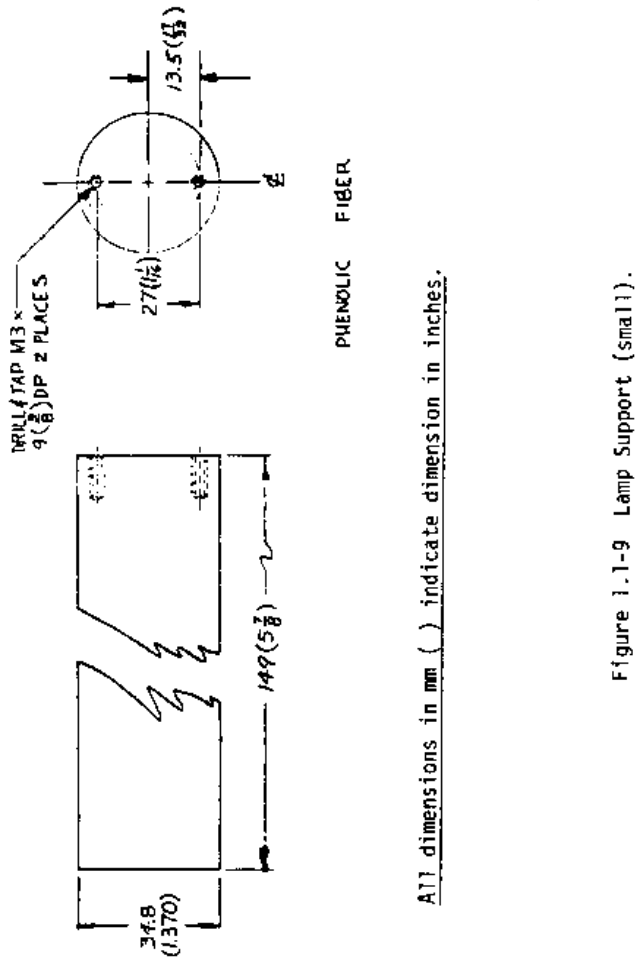

Figure B-9. Lamp support (small).

1.2.1.1.1 Transducer Mounting Fixture. The brass, transducer mounting fixture (see Figure B-4) is cylindrical with a concentric hole through the entire fixture. The transducer to be tested is mounted in a brass plug that is threaded at one end (see Figure B-6). The plug is screwed into the back end of the fixture until it bears on an 0-ring seal. The front end of the fixture contains a flat, circular glass window held by a brass ring-shaped retainer (see Figure B-5). The space between the window and the transducer plug can be evacuated or pressurized if required by test conditions.

1.2.1.1.2 Lamp Supports. The cylindrical supports for the flashlamps (see Figures B-8 and B-9) are made of a phenolic fiber. The socket for the flashlamp is installed at the top. The supports

are designed to permit adjustment of the flashlamps both in the azimuth and in the vertical plane. The lamp support locking screw keeps the support in the desired position.

1.2.1.1.3 Other Components. The scale is attached to the base (see Figure B-2) such that the edge of the slide block (see Figure B-7) facing the transducer test fixture serves as a fiducial mark to indicate the distance between the diaphragm of the test transducer and the center of the flashlamp. The lamp socket for the number 22 flashlamp is a medium, screw-base, incandescent lamp socket. The number 5 flashlamp requires a single-contact, candelabra bayonet socket.

1.2.1.2 Flashlamp. Experiments leading to the development of the thermal transient procedure indicated a commercial flashlamp number 22 (or number 2) appears most suitable. It has a medium screw base and is approximately 10 centimeters tall and 6 centimeters in diameter. The radiant transient generated by this flashlamp is roughly triangular with a rise time from 10 percent of the peak to the peak of about 13 milliseconds and a delay time of about 24 milliseconds, resulting in a total transient duration of roughly 37 milliseconds. Experimental data obtained from 80 samples showed an average density (measured 7 centimeters from the center of the lamp) of 1.8 J/cm^2 with a sample standard deviation of 8.7 percent. This flashlamp has been discontinued and is no longer readily available from photographic supply houses. A smaller number 5 flashlamp has a much lower output. The average energy density obtained at 7 centimeters from 50 samples was 0.56 J/cm^2 with a sample standard deviation of 7.5 percent. Since the energy output of the flashlamp is derived almost entirely from a chemical reaction, the initiating electrical energy has little bearing. For higher reliability of ignition, use three 1.5-volt dry cells connected in series.

1.2.1.3 Output Measuring System. The best technique to measure transducer output is with a storage or digital sampling oscilloscope. The vertical amplifier must be sensitive enough to display signals on the order of 1 percent of the full-scale output of the transducer. The sweep system must be able to show full displays of transients with durations from about 1 millisecond to 1 second.

1.2.1.4 Pressure Reference System. The thermal transient test procedure is generally performed with ambient pressure applied to the transducer. In certain cases, it may be desirable to test the transducer while it is subjected to a specified pressure above or below ambient. A simple pressurization system is adequate. For pressures up to about 690 kPa (100 psi), use a laboratory air line with a suitable regulator to set the desired pressure and a good dial pressure gauge to measure it. Use a vacuum pump with a suitable gauge when pressures below atmospheric are required.

1.2.1.5 Energy Meter (Optional). A radiant energy meter can be used to check the energy input during the tests. Because of the relatively high cost of such meters and the good statistical repeatability of the commercial flashlamps, a meter is not considered necessary for the simple thermal transient testing procedure described here. If an energy meter is used, the following arrangement is recommended. Mount the flashlamp in a vertical position at the center of the base. Position the commercial energy meter and the transducer-mounting fixture on opposite sides of the energy source. Make certain the diaphragm of the mounted pressure transducer

and the sensing element of the energy meter are aligned with, and equidistant from, the center of the flashlamp. Adjust all three elements in position vertically so they are coplanar.

1.2.2 Test Method.

The following subparagraphs describe the test methodology for the pressure transducer thermal transient test when using a flashlamp as the heat source.

1.2.2.1 Setup. Mount the transducer to be tested in the transducer-mounting block with the diaphragm flush with the front (threaded) portion of the plug. Figure B-1 shows the setup with the glass window in place. This window is necessary only when tests are to be conducted at pressures other than ambient. The glass window specified can be expected to reduce the thermal transient response of the transducer by less than 2 percent (well within the experimental uncertainty of the method).

1.2.2.2 Conditions. A distance of 7 centimeters between the transducer diaphragm and the center of the flashlamp is recommended. This distance provides enough thermal energy input to the transducer for screening purposes but prevents energy transmission by conduction.

1.2.2.2.1 The thermal energy density from the flashlamps generally follows the theoretical inverse square law relation. If a distance other than the recommended 7 centimeters is necessary, Table B-1 can be used as a guide.

TABLE B-1. THERMAL ENERGY-DISTANCE RELATIONSHIP

Flashlamp-Transducer Distance (cm)	Average Energy Density (J/cm^2)	
	#22 Flashlamp	#5 Flashlamp
7	1.80	0.56
8	1.40	0.42
9	1.15	0.43
10	0.96	0.28

1.2.2.2.2 With the aid of the scale mounted on the base of the tester, set the slide block so the center of the flashlamp is 7 centimeters from the diaphragm of the transducer. Tighten the slide block locking screw to keep the block at this location. (If an energy meter is used, its sensing element should also be placed 7 centimeters from the center of the flashlamp.) Line up the components vertically with each other so the center of the flashlamp is collinear with the centers of the transducer diaphragm and energy meter sensing element (if one is used). Adjust the flashlamp on its holder by raising or lowering the lamp support in its hole in the slide block. In addition, for the number 22 flashlamp, rotate the lamp support until the two horizontal hornlike

ends of the wire supports within the lamp point away from the transducer test fixture. Tests have shown the appearance of a black spot on the glass envelope of the flashlamp after firing, which may block some of the thermal energy from reaching the transducer.

1.2.2.2.3 A simple push-button switch at the end of a double lead which is about 6-feet long is used to fire the lamp. Experimenters are advised to turn away from the flashlamp before it is fired. Use of safety goggles is recommended since flashlamps have been known to explode. Finally, gloves may be needed when removing the expended flashlamp after the test.

1.2.2.3 Procedure.

1.2.2.3.1 Connect the test apparatus as described and allow the test equipment adequate warm-up time before starting the test.

1.2.2.3.2 Insert a fresh flashlamp into the socket and check the position of the scope trace to be sure the entire thermal transient output of the transducer will appear on the screen. (Several practice tests may be required.) With the oscilloscope trace in the desired position, erase the scope screen (for a storage scope) and set the triggering system for a single triggered sweep.

1.2.2.3.3 In actuating firing switch, the single sweep should display a picture of the transducer's complete thermal transient response.

1.2.2.3.4 The thermal transient test is performed at least three times to measure the repeatability of the transducer response. To permit the transducer to fully return to its initial condition, allow an adequate interval between tests. By putting the scope sweep on its repetitive setting, the return of the trace to its initial zero position can be monitored. Typically, an unprotected transducer should be ready for a second test about 3 minutes after the first test.

1.2.2.3.5 At the completion of the test, the burned-out flashlamp is removed and a fresh one inserted in preparation for another test.

1.2.2.4 Data Reduction.

1.2.2.4.1 It is convenient to photograph the stored trace on the oscilloscope screen for data analysis purposes. From the sensitivity of the transducer (in terms of output per unit of pressure) and the deflection sensitivity of the oscilloscope, the thermal transient output can be calculated in terms of equivalent pressure units. Alternatively, the calculated results can give the output as a percentage of the full-scale range of the transducer.

1.2.2.4.2 By determining the energy density of the thermal transient, it is possible to then relate the transducer output per unit of energy. Transducer responses and the measured energy levels tend to follow the inverse square law, thus permitting valid tests over a range of transducer-source distances.

1.2.2.4.3 The accuracy of the transducer response to thermal transients depends on the accuracy of the energy density which, in turn, depends on the accuracy of the energy meter.

1.2.2.4.4 Other factors include the repeatability of the flashlamp output (sample standard deviation of 8.7 percent for the number 22), variations in the flashlamp output as a function of azimuth (estimated at less than ±3 percent), and the presence of the glass in the fixture (2 percent loss).

1.2.2.4.5 The effects of transducer diaphragm misalignments with the normal axis of incident radiation follow the cosine law which produces an error of less than 1 percent with misalignments of up to ±6 degrees.

1.2.2.4.6 In summary, it is estimated that with the use of the number 22 flashlamp without reflector, 7 centimeters from the diaphragm of the test transducer and the energy meter, transducer zero shift as a function of energy density when exposed to a flash duration of about 37 milliseconds can be determined within approximately a repeatability of better than ±14 percent. This procedure is designed for use primarily in screening tests where many different transducers are compared and where the absolute accuracy is less important than the achievable repeatability.

1.2.2.4.7 In considering the relation of the test energy levels to those occurring in actual thermal transient environments, the test energy level can be averaged over the time duration of the thermal transient tests by assuming the shape of the transient to be triangular. Experimental data shows this assumption to be reasonable. An equivalent thermal power level of roughly $1.2 \cdot 10^6$ W/m^2 for the number 22 flashlamp is obtained. Heat transfer rated in rocket engines, as an example, are reported to range from $3 \cdot 10^6$ W/m^2 to $4 \cdot 10^6$ W/m^2.

1.3 Propane Torch with Slotted Disk

The following subparagraphs describe the apparatus and technique to perform a thermal transient test when a propane torch is used as the heat source.

1.3.1 Equipment.

The major items of equipment needed for this test procedure are described in detail in the following subparagraphs.

1.3.1.1 Basic Hardware. Figure B-10 shows the setup used for the rotating slotted disk thermal transient test setup for pressure transducers. It consists basically of the same transducer fixture used in the flashlamp procedure. Although not specifically detailed here, the rotating disk and drive subsystem components should be tailored to work with the transducer fixture.

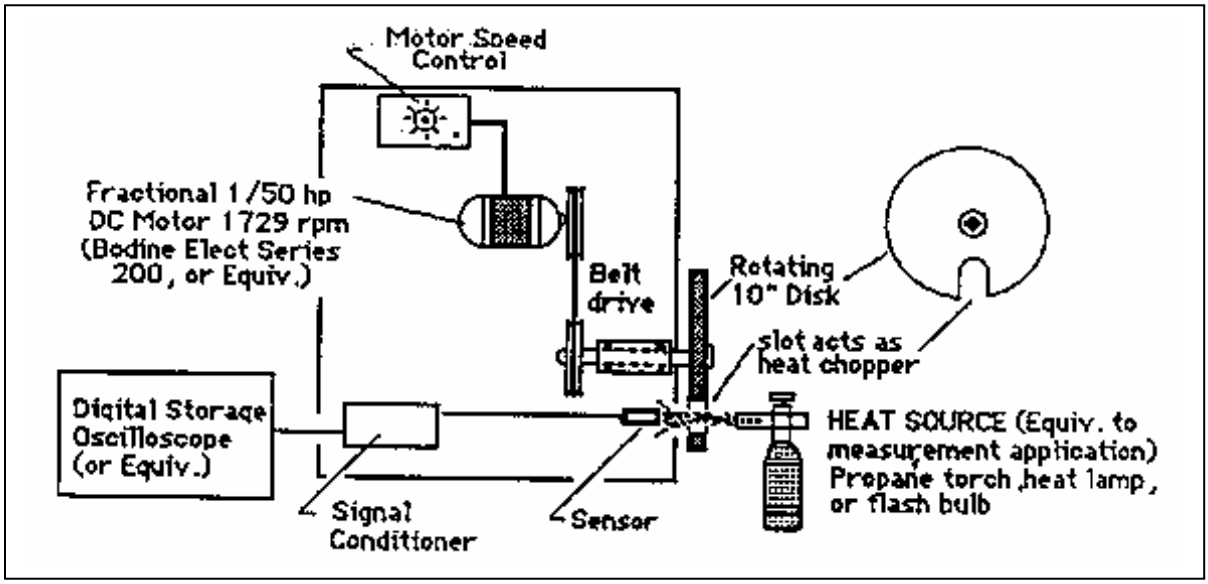

Figure B-10. Test setup for transient thermal shock testing of sensors using a slotted, rotating disk, and a heat source equivalent to measurement application.

1.3.1.2 Output Measurement System. The same equipment used in the flashlamp tests may be used here. The major difference is in the setup of the oscilloscope. This procedure is a repetitive test rather than single shot. The oscilloscope can be internally triggered on the input signal and minor adjustments to the test setup can be performed.

1.3.2 Test Method.

Generally the test method used in the flashlamp test will be followed. An energy meter should be used to determine the radiant energy being applied to the transducer.

1.3.3 Procedure.

Connect the test apparatus as shown in Figure B-10 noting this is a repetitive rather than a one shot test.

1.3.4 Data Reduction.

The data reduction techniques used in the flashlamp tests are generally applicable to this test.

1.4 References

a. Hilten, J. S., Vezzetti, C. F., and Lederer, P. S., *A Test Method for Determining the Effect of Thermal Transients on Pressure Transducer Response*, NBS TN 905, March 1976.

b. Lederer, P. S. and Hilten, J. S., *A Laser Technique Investigating the Effects of Thermal Transients on Pressure Transducer Performance Characteristics*, NBS TN 723, May 1971.

This page intentionally left blank.

APPENDIX C

TRANSMITTER TEST PROCEDURES

Incidental AM Derivation

Calibration

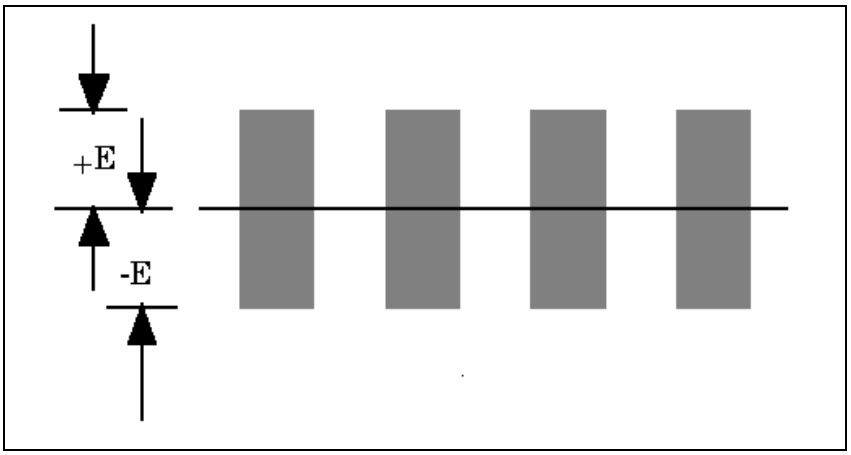

Figure C-1. Transmitter RF envelope.

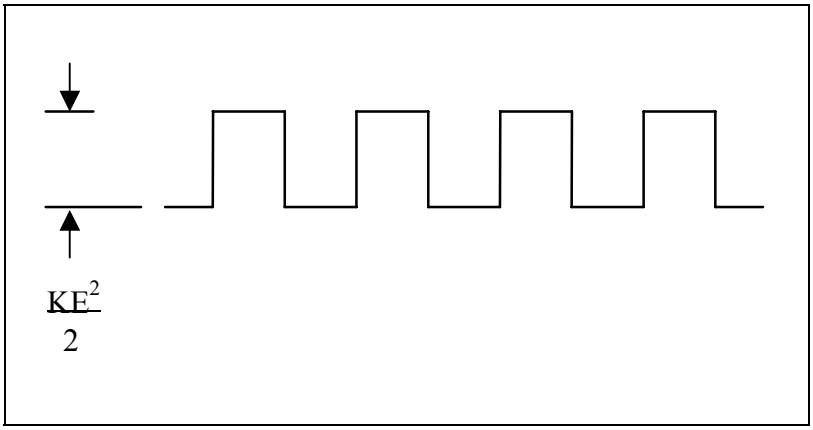

Figure C-2. Crystal detector output.

For transmitter RF envelope:

$$V(t) = E \cos \omega ct \{ (1/2) + (2/\pi) \cos \omega Mt - (2/(3\pi)) \cos 3\omega Mt + ... \} \qquad \text{(C-1)}$$

which, for crystal detector output, becomes:

$$V'_{out} = KE^2 \cos^2 \omega_c t \{ (1/2) + (2/\pi) \cos \omega_M t + ... \}^2 \qquad \text{(C-2)}$$

$$= (KE^2/2) (1 + \cos 2\omega_c t) ((1/4) + (2/\pi) \cos \omega_M t + \text{Higher Order Terms})$$

Considering that the wave analyzer is ac coupled and is tuned only to the fundamental of the square wave modulation frequency, M, V_{out} reduces to

$$V'out = (KE2/2) [(2/\pi) \cos \omega Mt] = (KE2/\pi) \cos \omega Mt \qquad \text{(C-3)}$$

Also, since the wave analyzer responds to the average value of the measured voltage,

$\cos \omega Mt = 2/\pi$, and V'out

further reduces to

$$V'out = 2KE2 / \pi 2 \text{ (Measured Signal or Sm)} \qquad \text{(C-4)}$$

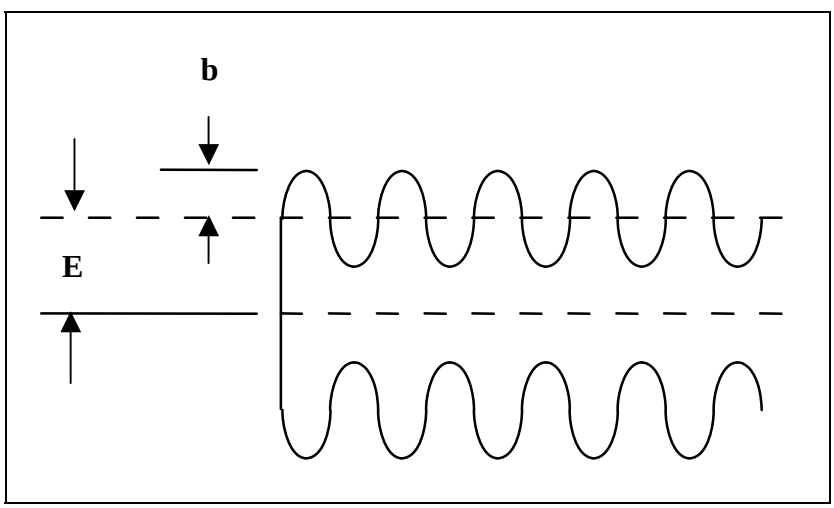

Figure C-3. Amplitude modulation.

For amplitude modulation:

$$V_{(t)} = \cos \omega_c t \; \{ E + \Sigma_i (b_i \cos \omega_i t)\} \qquad \text{(C-5)}$$

which, for crystal detector output becomes:

$$V_{out} = K \cos^2 \omega_c t \; \{E + \Sigma_i \; (b_i \cos \omega_i t)\}^2 \qquad \text{(C-6)}$$

$$= (K/2)\,(1 + \cos 2\omega_c t)\; \{E^2 + 2E\,\Sigma_i\,(b_i \cos \omega_i t) + \text{second order b terms}\}$$

since by definition, b << E, the second order terms are negligible. Also, because the wave analyzer responds only to the average amplitude of the modulation frequency (m) to which it is tuned, V_{out} reduces to:

$$V''_{out} = \left(\frac{K}{2}\right)(2E\, b_m \cos \omega_m t) \qquad \text{(C-7)}$$

$$= KEb\left(\frac{2}{\pi}\right)(\text{ measured noise modulation or } N_m)$$

$$\%\ \text{AM} = \frac{b}{E} = \frac{\textit{Peak modulation amplitude}}{\textit{Peak carrier amplitude}} \bullet 100\%$$

(1) Solving S_m for E,

$$E = \frac{\pi^2 S_m}{2KE} \qquad \text{(C-8)}$$

(2) Solving N_m for b,

$$b = \frac{\pi N_m}{2KE} \qquad \text{(C-9)}$$

(3) dividing (2) by (1),

$$\frac{b}{E} = \left(\frac{\pi N_m}{2KE}\right) \div \left(\frac{\pi^2 S_m}{2KE}\right) \qquad \text{(C-10)}$$

$$= 0.318\left(\frac{N_m}{S_m}\right)$$

This page intentionally left blank.

APPENDIX D

CALCULATION OF NONLINEARITY BY METHOD OF LEAST SQUARES

Graphical Method

To normalize data obtained on test data sheets for modulation linearity, subtract minimum output parameter value from maximum output parameter value and divide the difference by 10. Use this increment to calculate values on a straight line between minimum and maximum. Calculate the difference between measured readings and calculated readings for each data point and indicate polarity with respect to calculated values.

Plot the data points that represent the difference between the measured and calculated values as shown in Figure D-l. Align straightedge between one endpoint and adjacent point and draw a line starting from end point and extending two-thirds of horizontal distance between the two points. Realign straightedge between end of this line and third point, drawing another line segment of same horizontal length from end of previous line segment. Continue process until point on opposite side of plot has been used as the final straightedge guide. The end of this line will occur two-thirds of horizontal distance across graph and should be marked for reference A. Repeat this procedure starting at opposite side of graph ending at point B. Draw a straight line through points A and B (see Figure D-l). This is the best straight line through the plotted points as determined by the graphical least squares method.

Calculation

Inspect the graph and record the maximum vertical excursion from the best straight line (see Figure D-l) to any plotted data point. The percent nonlinearity is determined by the following:

$$\text{Maximum nonlinearity} = \frac{\textit{Maximum excursion from best straight line}}{\textit{Output proportional to maximum input change}} \bullet 100 \qquad \text{(D-1)}$$

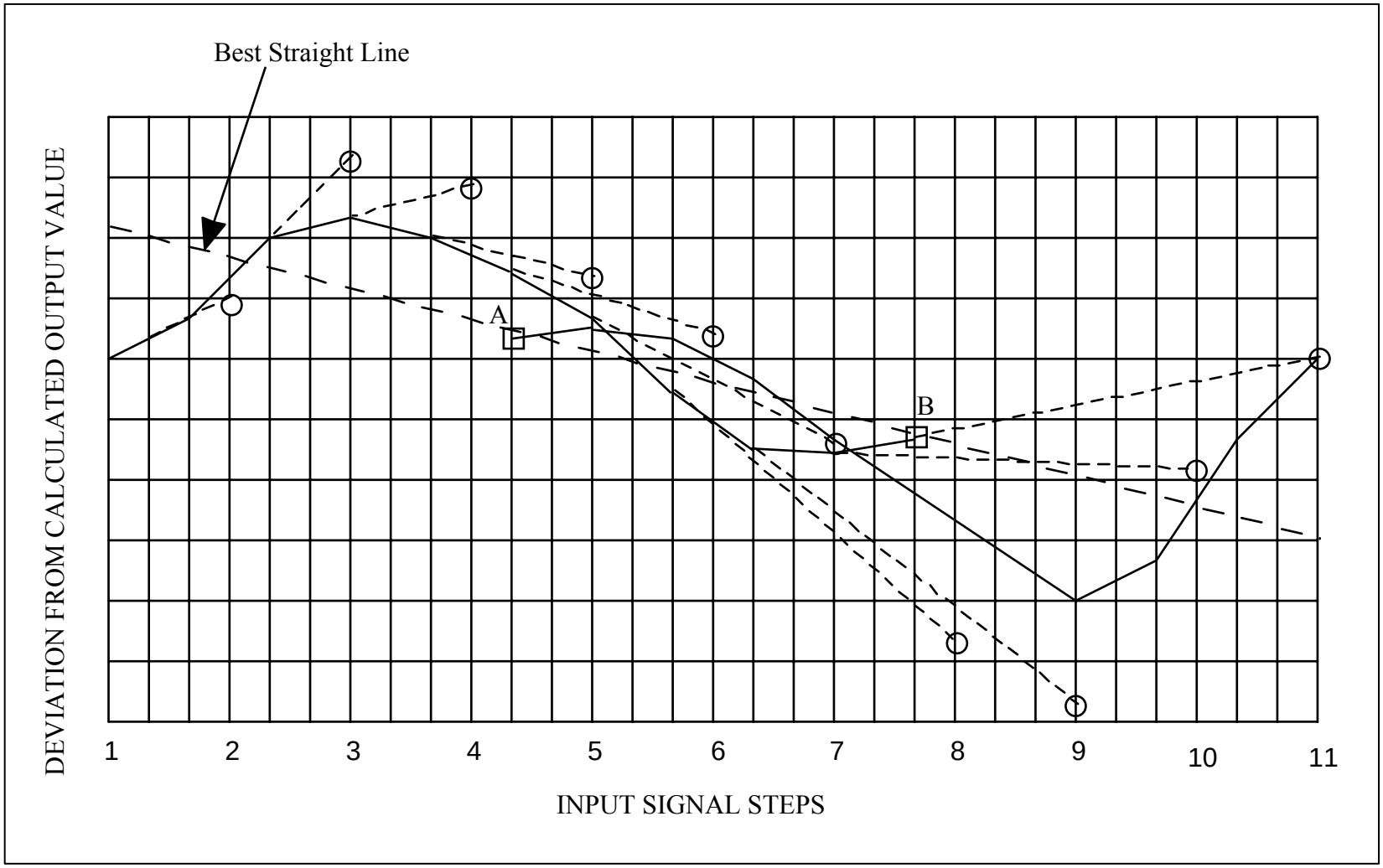

Figure D-1. Measured and calculated values.

Mathematical Method

Determine the error at each data point as

$$Error = y_i - \hat{y}_i \tag{D-2}$$

where y_i is the measured value and $\hat{y}_i$ is calculated $\hat{y}_i = ax_i + b$

$$a = \left\{ n\sum x_i y_i - \sum x_i \sum y_i \right\} / \left\{ n\sum x_i^2 - \sum x_i \sum x_i \right\} \tag{D-3}$$

$$b = \left\{ \sum x_i^2 \sum y_i - \sum x_i y_i \sum x_i \right\} / \left\{ n\sum x_i^2 - \sum x_i \sum x_i \right\} \tag{D-4}$$

where i assumes values from 1 through 11 and n, the number of data points, equals 11.

Calculate maximum nonlinearity as follows:

Maximum nonlinearity = {Error (maximum)} / {$y_{max} - y_{min}$} (D-5)

This page intentionally left blank.

APPENDIX E

INSTALLATION AND OPERATING GUIDE

ADVANCE RANGE TELEMETRY (ARTM) CONSTANT ENVELOPE (CE)

OFFSET QUADRATURE PHASE SHIFT KEYING (OQPSK))

TIER 1 MODULATION ANALYZER (T1MA)

Version 1.03, 30 November 2004

Table of Contents

1.1 Scope, Introduction, and Restrictions E-3

2.1 Software and Computer Requirements E-3

2.1.1 Software. E-3

2.1.2 Hardware. E-3

2.1.3 Distribution Contents E-4

3.1 T1MA Software Installation E-5

4.1 T1MA Operation E-5

4.1.1 Startup E-5

4.1.2 GUI Controls. E-5

5.1 Normal Processing Sequence E-8

5.1.1 Graphic Analysis Controls E-12

6.1 Intentional Run Termination E-12

7.1 Known Abnormal Conditions E-12

8.1 Memory Monitoring E-14

9.1 Processing Speed E-14

10.1 Baseline Examples E-14

11.1 Data Acquisition E-15

12.1 References for Appendix E E-16

ANNEX A TO APPENDIX E: REFERENCE EXAMPLES E-17

1.1 Scope, Introduction, and Restrictions

This guide provides instructions for installation and basic operation of the CE OQPSK Tier 1 Modulation Analyzer (T1MA) software. In addition, a basic guide to sample data acquisition is provided. Definitions, descriptions, and interpretation of the analyzer's data products are not within the scope of this document.

The open source code is distributed free of charge to U.S. Government agencies and Department of Defense contractors. However, the code is offered unsupported. In other words, the code is offered without warranty and without offer of technical support. End users are solely responsible for the operation, maintenance, and any or all consequential damages that may result from use of this product. Accuracy and validity of the data products are not guaranteed.

The Jet Propulsion Laboratory (JPL), California Institute of Technology, claims copyrights to the Matlab script "ARTMgui.m" contained within this distribution. The JPL has granted permission for distribution to U.S. Government agencies and U.S. Government contractors.

2.1 Software and Computer Requirements

2.1.1 Software.

The T1MA is implemented with Matlab and Simulink from the Mathworks Inc., and requires the following product licenses:

- Matlab
  - Matlab
  - Signal Processing Toolbox
  - Communications Toolbox
- Simulink
  - Simulink
  - Communications Blockset
  - Signal Processing Blockset

Version 1.03 has only been tested on personal computers (PCs) running Windows 2000 and Windows XP operating systems with Matlab release 14, version 7.0.1.24704(R14) Service Pack 1. Certain changes made to the model are likely to preclude compatibility with earlier Matlab versions.

2.1.2 Hardware.

The T1MA is very computation intensive. This fact, coupled with the underlying manner in which Matlab uses and manages memory under Microsoft Windows, dictates use of a high speed PC and a lot of Random Access Memory (RAM). A candidate host should have a CPU clock speed of at least 1 Gigahertz (GHz) and at least 512 Megabytes (MB) of Random Access

Memory (RAM). Otherwise, the application will certainly run slow, and may exhibit mysterious run time failures.

2.1.3 Distribution Contents.

The T1MA distribution consists of two documentation files and one Windows file folder. The document files consist of this guide and an application note. The file folder "T1MA ver 1_03" contains the T1MA code, additional folders, and sample data:

```
>> dir

.                          artmGUI.m                  rec_cartracking.m
..                         bitPT_ID.asv               rec_dft.m
BEP_reference_6.mat        bitPT_ID.m                 rec_filter.m
BEPplot.m                  con12.asv                  rec_symtracking.m
con12.m                    report.asv                 PHpaths.asv
external.mdl               report.m                   PHpaths.m
files                      reports                    RMS.m
runexternal.asv            RxBT2ord4osr20wt.mat       firbrickBT_65osr20.mat
runexternal.m              T1MA_Instructions.doc      firbrickBTs2osr20.mat
sinterp.m                  T1QP.asv                   firbrickBTs3.mat
t1ma.asv                   T1QP.m                     fireqripBTs2_4osr20.mat
t1ma.m                     T1nM.asv                   nearest.m
T1nM.m                     overlay
```

The subdirectory folders in this list have the following functions:

- T1MA ver 1_03\files – default repository for sample data files.
- T1MA ver 1_03\Overlay – an empty repository for supplemental data files used to overlay externally generated BEP data on projected BEP plots. This is considered an advanced feature and is not documented here.
- T1MA\reports – an empty destination folder for summary reports created by T1MA when this option is exercised in the T1MA Graphics Control Window.

The "T1MA ver 1_03\files" folder is distributed with the subdirectory folder "T1MA ver 1_03\files\baseline" which contains sample data files:

```
>> dir

.                                  NLAhardware
..                                 SO_TGsimfc30e6fs100e6rb10e6.mat
Bsim6R4fc30e6fs96e6rb8e6.mat       T1MAREFsiml_fc30e6rf100e6Rb10e6.mat
JRsimR4fc30e6fs96e6rb8e6.mat
KFsimfc30e6fs100e6rb10e6.mat
```

The above list identifies reference case files of RF sample blocks generated by simulation. The subdirectory folder "T1MA ver 1_03\files\baseline\nlahardware" contains:

```
>> dir

.       B_rb2_NLA.mat       SO_TG_rb2_NLA.mat
..      JR_rb2_NLA.mat      lecroybinread.m
```

These are examples of *measured* results taken from laboratory grade reference implementations of FQPSK-B, FQPSK-JR, and SOQPSK-TG modulations amplified with a linear Power Amplifier (PA) driven approximately 6 dB into saturation. The script "lecroybinread.m" is a simple example of how binary data sample blocks taken from a Lecroy model LC584AL oscilloscope are converted to Matlab compatible data. This particular scope has an option to pack 8 bit binary samples into a Microsoft compatible file format. The scope's digitizer format is 8-bit offset binary.

3.1 T1MA Software Installation

Prior to T1MA software installation, it is assumed that Matlab, Simulink, and all requisite option modules have already been installed and tested in accordance with Mathworks Inc. installation instructions. T1MA installation is simply a matter of copying the entire "T1MA ver 1_03" folder and all its contents to an appropriate local high-speed disk drive.

Verification of operation is accomplished by following the operating instructions below while using the baseline sample files provided. If processing sequence and data products match those in Annex A, then the product is ready to use.

4.1 T1MA Operation

4.1.1 Startup. Launch Matlab and leave the command window on screen. Clear the workspace of all variables and figures. Make the T1MA directory current or add it to your Matlab default path. At the command prompt type: "t1ma<CR>". The t1ma GUI will start and the analyzer control panel shown in Figure E-1 should appear.

4.1.2 Graphical User Interface (GUI) Controls.

4.1.2.1 Sample File. The sample file path\name can be entered directly to this field, or the "Browse" button may be used to navigate through directories and select a data file as shown in Figure E-2. This example contains data files and an extra subdirectory added by an end user.

4.1.2.2 Carrier Frequency. This value must accurately reflect the actual carrier frequency of the signal applied to the scope *and* must take into account any aliasing that occurs in the oscilloscope sampling scheme. The default value of 30 MHz assumes a carrier frequency of 70 MHz sampled at a rate of 100 Ms/s, hence folding the signal down around a carrier frequency of 30 MHz. Carrier frequency errors larger than approximately ±5 kHz of specified frequency can result in erratic performance.

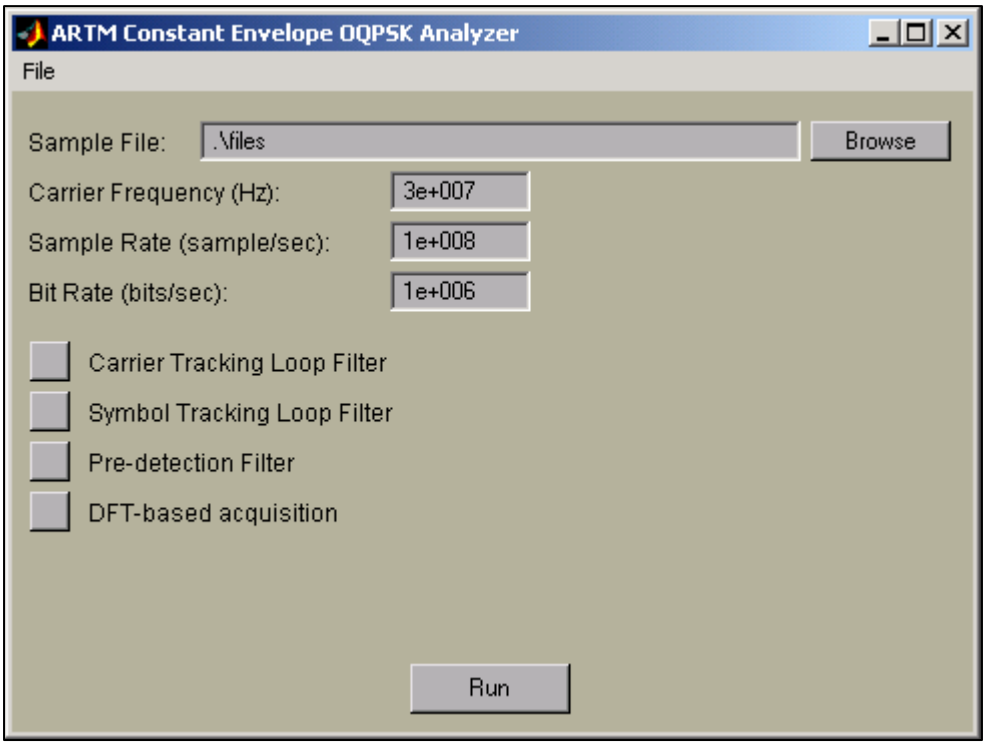

Figure E-1. GUI control window.

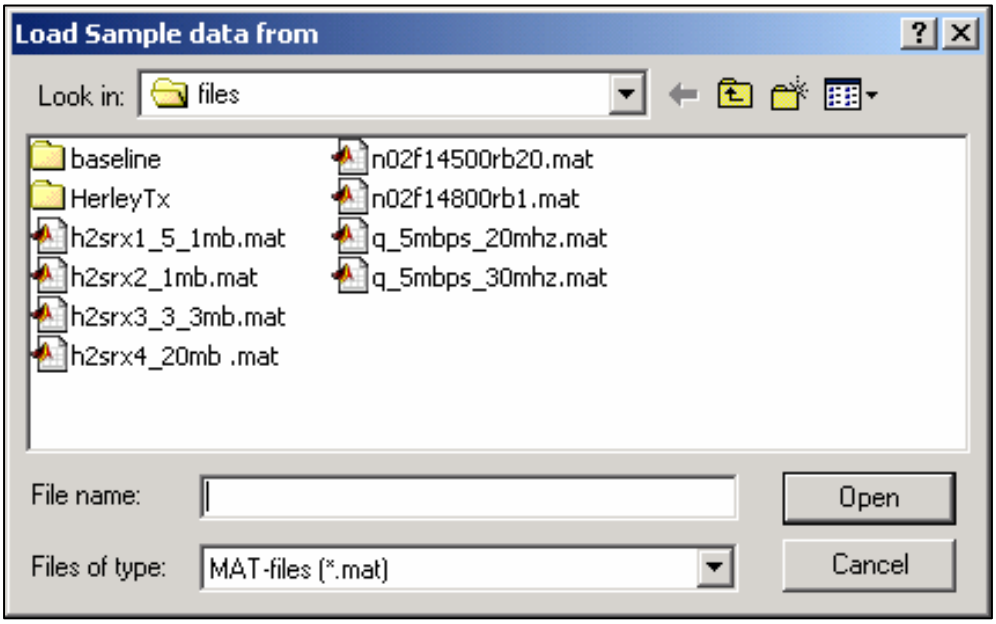

Figure E-2. File browser window.

4.1.2.3 Sample Rate. This rate is the actual sample rate used in the external scope sampling process.

4.1.2.4 Bit Rate. The bit rate is the actual data rate, not symbol rate, applied to transmitter under test. Errors larger than approximately ±20 ppm between actual and specified rate can cause erratic performance. Limit the mantissa of the bit rate specification to 4 significant figures. More significant figures can lead to the bit rate related error described in the known abnormal conditions section below.

4.1.2.5 Carrier Tracking Loop Filter. The analyzer sets a default loop bandwidth based on current contents of the bit rate field. The default is considered appropriate for normal operation. It can be examined and overridden by clicking on this button. The dialog box shown in Figure E-3 will appear.

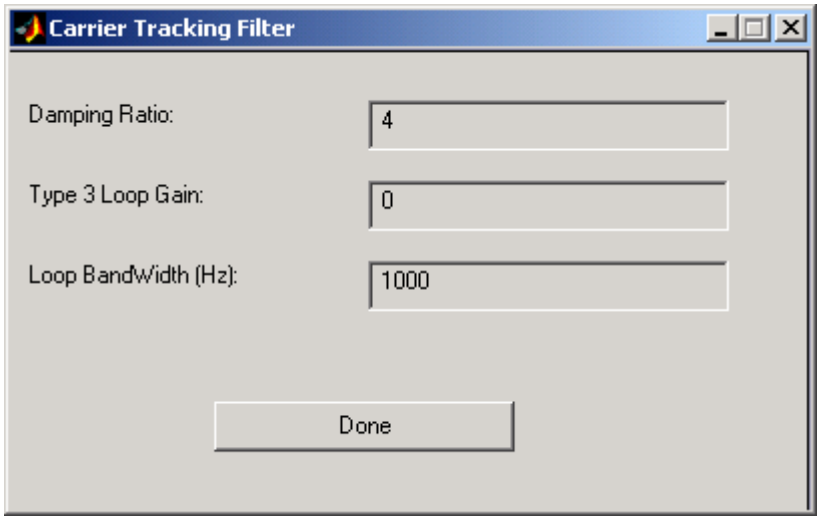

Figure E-3. Dialog box: carrier tracking filter.

Under no circumstances should the Damping Ratio or Type 3 Loop Gain values be changed without thorough knowledge of the modified Costas loop implementation and the impact that changes may have. The reader is referred to Reference 12.1a of this Appendix for detailed information on the modified Costas loop and the description of these parameters. It is noted in passing however, that the default "Type 3 Loop Gain" is zero. This means that default loop operation is a type II loop. The Type 3 operation has been found to yield little benefit.

If loop bandwidth is changed, the change takes effect as soon as either a tab key, enter key, or the "Done" button is activated. The latter action will close this window.

4.1.2.6 Symbol Tracking Loop Filter. The analyzer sets a default Digital Transition Tracking Loop (DTTL) loop bandwidth based on current contents of the *bit rate* field. The default is considered appropriate for normal operation. It can be examined and overridden by clicking on this button. The dialog box shown in Figure E-4 will appear.

Under no circumstances should the Damping Ratio or Type 3 Loop Gain values be changed without thorough knowledge of the modified Costas loop/DTTL implementation and the impact that changes may have. If loop bandwidth is changed, the change will take effect as soon as either a tab key, enter key, or the "Done" button is activated. The last action will close this window.

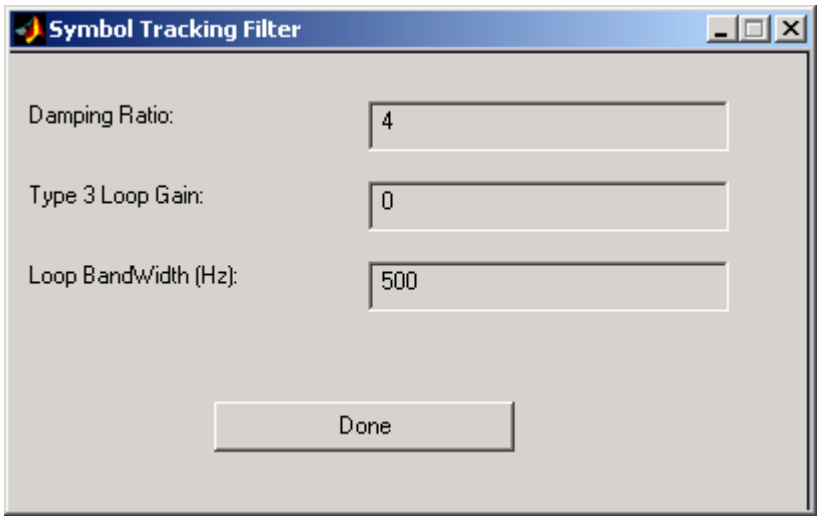

Figure E-4. Dialog box: symbol tracking filter.

4.1.2.7 Pre-detection Filter. The default pre-detection filter is an equiripple linear phase Finite Impulse Response (FIR) design with normalized passband bandwidth BT_s=2.4 where T_s is the symbol period. Two additional selections are available, but their use is discouraged.

4.1.2.8 Discrete Fourier Transform (DFT) Based Acquisition. This window specifies the length of Finite Fourier Transform (FFT) used to estimate true carrier frequency for Costas loop initialization. The default of 1M samples is recommended unless sample block size is smaller. This may be examined and changed in the same manner as the other parameter management button windows.

5.1 Normal Processing Sequence

Once a data file has been selected and all parameter fields set to desired values, the analyzer is started by mouse selection of the "RUN" button in the GUI control window. A short period of apparent inactivity (typically several seconds) will ensue while the script "runexternal.m" executes and ultimately starts the Simulink model "external.mdl". As soon as model execution begins the dynamic display windows shown in Figure E-5 through Figure E-7 should appear.

Figure E-5 is a conventional "eye" diagram. The scatter plot in Figure E-6 is an OQPSK constellation that results from sampling I and Q channels at mid-symbol and symbol end points, retaining the bit interval inter-channel delay. The eyes should open and the constellation should begin to stabilize within approximately 1000-3000 symbol periods. Loop synchronization progress can be gauged with the time axis of the "phase" window oscilloscope time axis

(Figure E-7). This axis is equivalent to elapsed real time. Symbol timing loop and carrier recovery loop phases are in units of radians and will be horizontal lines if there is no carrier frequency error or symbol rate error in the data. The third trace has arbitrary units of error power in the symbol timing loop. This linear scale displays the log of DTTL loop error variance averaged over a sliding time window. The model declares both loops to be synchronized at the instant this parameter value falls below 4 for the first time.

This example is typical of normal operation; the bit rate is 10 Mb/s and synchronization occurs approximately 0.5 msec into the data record, or approximately 2500 symbols into the record. Once the model declares synchronization, data capture variables are opened. Demodulated I and Q signal data are captured over the subsequent 4000 bit periods. All examples given were run on a 2001 vintage Dell Optiplex PC w/Intel Pentium 4 processor, 1.4 GHz CPU clock and 512 MB of RAM. On this machine, the model execution phase typically requires 1-3 minutes depending on bit rate and signal characteristics.

As soon as the prescribed sample block is captured, model execution terminates. The model windows remain on screen as processing is handed of to Matlab scripts "t1qp" and "t1nm". The workspace window will now list analysis progression through two preliminary and four major steps:

```
>> t1ma
        Q CHANNEL USED FOR AMPLITUDE SCALING
        Sample preparation complete
        Analysis Progress:
                (1) Apply Detection filter.
                (2) Estimate BEP
                (3) Estimating Defects
                (4) Phase Trajectory Deviation:
>>
```

This phase executes in approximately 50 seconds. If all aspects of the post-simulation analysis are successful, 2 new windows pop up, one behind the other:

- Figure E-8 - Tabular analysis summary
- Figure E-9 - Graphics Analysis *control* window

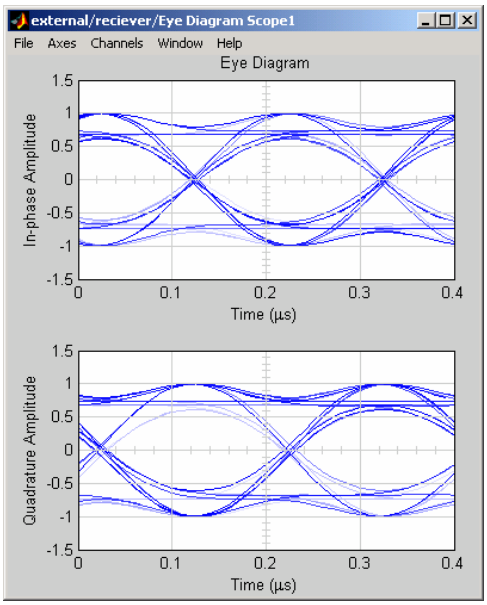

Figure E-5. External/receiver/eye diagram.

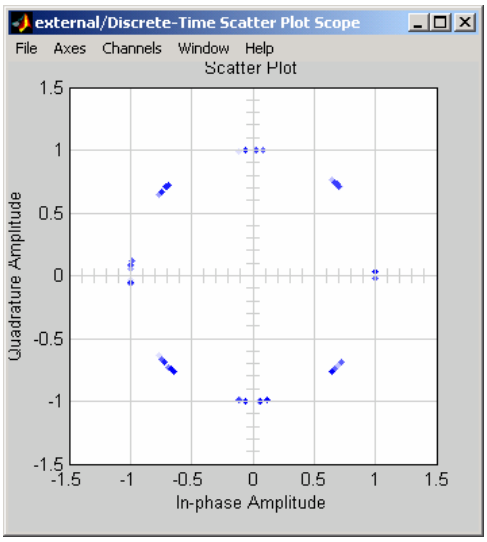

Figure E-6. External, discrete time scatter plot.

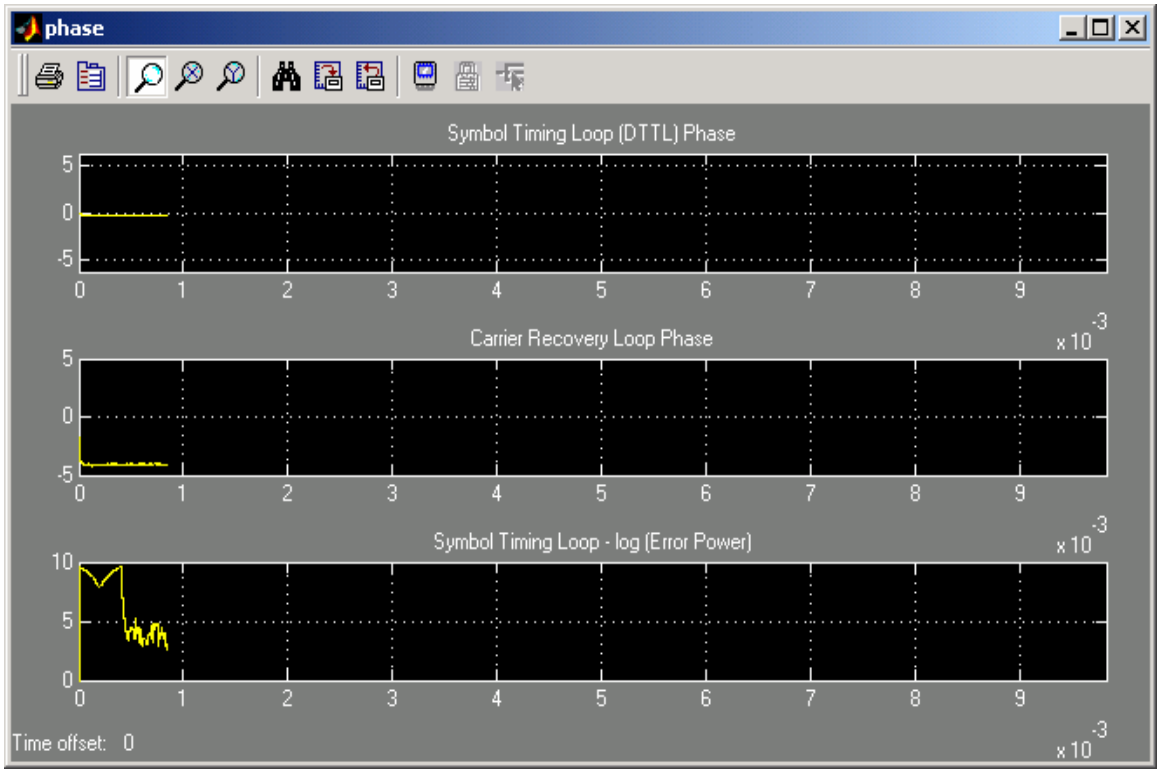

Figure E-7. Loop synchronization progress.

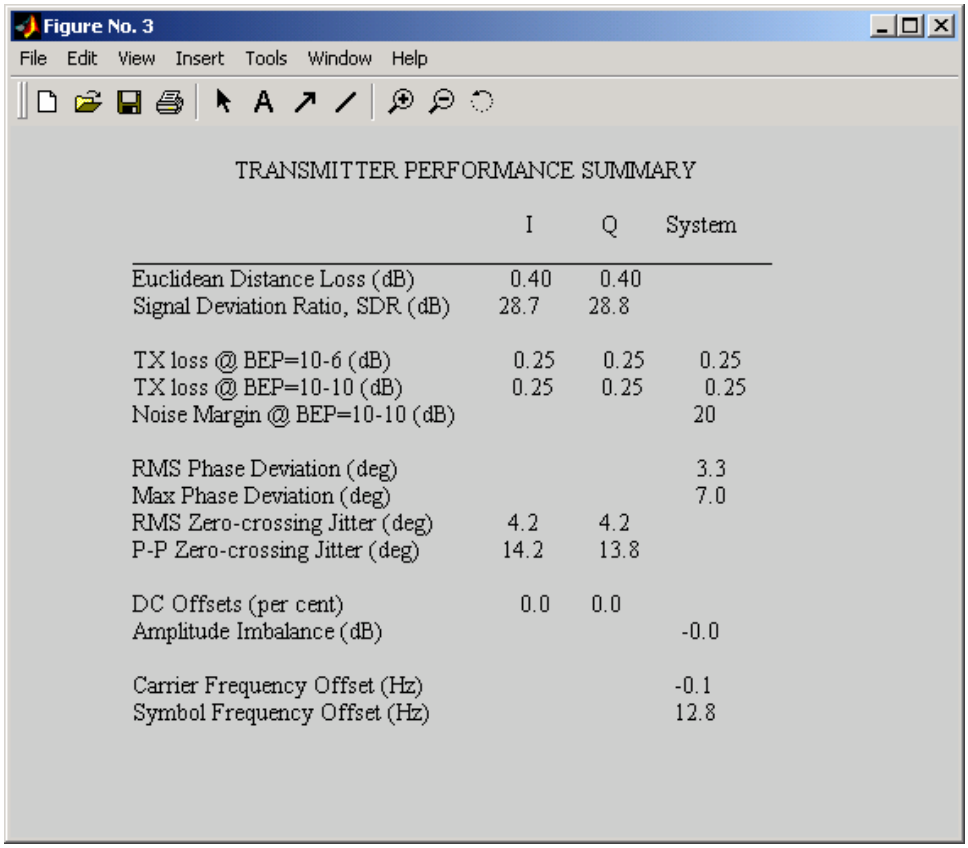

Figure E-8. Tabular analysis summary.

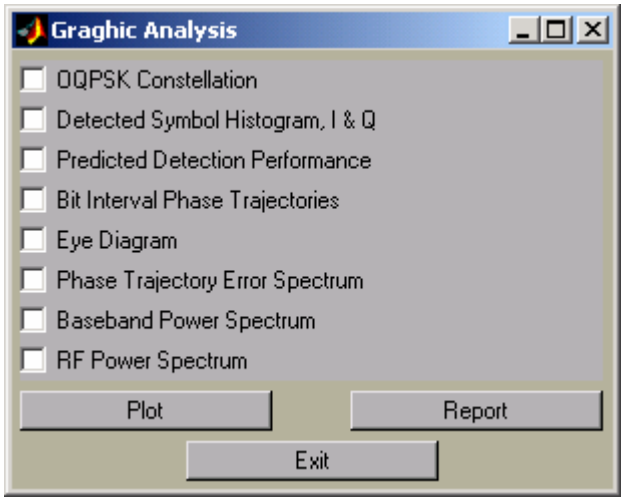

Figure E-9. Graphics Analysis Control Window.

5.1.1 Graphic Analysis Controls. A single plot option or any combination of plot options may be viewed in one window by selecting one or more of the check boxes with the mouse, followed by selection of the "Plot" button. This process can be repeated as many times as desired, with each plot command resulting in a new plot window. For ease of management, it is good practice to close plot windows before too many windows accumulate. The "Report" button opens a window listing complete documentary text of the run parameters, date and time, as well as a copy of the summary analysis results. When finished with plot or report creation, the "Graphic Analysis" window should be closed with the Exit button (NOT the Window's "x" icon). Graphic analysis product windows should be closed with selection of the normal "x" icons. Control flow then cleanly reverts to the GUI run command window for additional runs if desired.

6.1 Intentional Run Termination

If for any reason during the simulation run phase, you decide to abort the run, then proceed as follows:

- Make the simulation model window "External" current with a mouse click on its window.
- Halt the simulation with the normal Simulink toolbar halt icon.

Early termination will force the following error message to appear in the workspace window:

"Insufficient run length for analysis."

The GUI will still be active and another run may be started without other action.

7.1 Known Abnormal Conditions

Three situations are known to cause apparent software failures. This section describes the conditions, symptoms, and corrective measures.

7.1.1 Corrupt Signal or Signal Sample. First, if a particular signal sample's integrity is good enough for the demodulator to run and synchronize, but is in some way corrupt enough for predicted error probability to be so bad that predicted Bit Error Probability (BEP) at either one of the benchmark BEPs (1x10-6 and 1x10-10) requires an Eb/N0 greater than 20 dB, then the module "nearest.m" reports an error message to the workspace:

"Measured BEP range does not include chosen benchmarks"

This message is followed by a GUI callback pop-up error window. When this occurs, simply close the error window and use the normal operation sequence to prepare for and command another run.

7.1.2 <u>False Lock</u>. The second abnormal condition to likely be encountered with frequent use of this tool is a false lock condition in the hybrid Costas/DTTL loop design. Certain combinations of clean signals with very high Signal to Noise Ratio (SNR) coupled with certain initial symbol value sequences can cause the loops to lock in a weak, marginally-stable false lock angle. The simulation preprocessing steps include addition of noise to the first 1000 samples of each data file in order to prevent this condition, but it is not foolproof. This condition is readily identified by observation of the eye and constellation symptoms shown in Figure E-10 and Figure E-11.

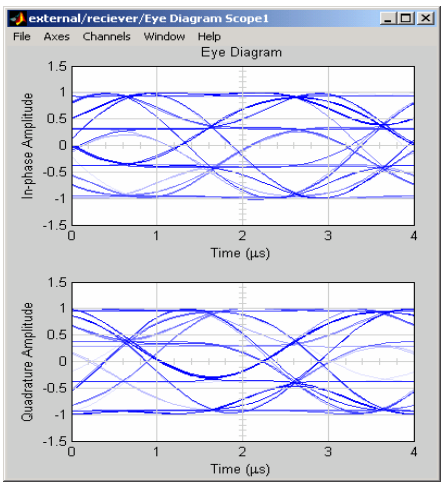

Figure E-10. False lock eye diagram.

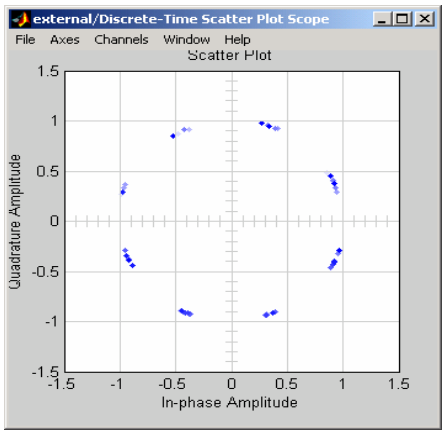

Figure E-11. False lock constellation.

The loops will eventually synchronize in this false lock state. If the processes are left to run their course, the error condition first described above will result. Early run termination is the best course here. Sometimes the condition can be overcome by increasing the carrier loop bandwidth, symbol loop bandwidth, or both. As long as one does not increase bandwidths by more than a factor of 2 to 3, the analysis results are still likely to be reliable if the false lock is remedied. Otherwise, one should try deleting a small number of initial samples within the data file or take a new sample.

7.1.3 <u>Bit Rate</u>. Problematic conditions associated with complex resampling ratios are caused by specifying too many significant figures in bit rate, or bit rate to resampled symbol rate ratios that lead to repeating fractions. Either one of these conditions produce the following error message sequence:

```
??? Filter length is too large - reduce problem complexity.

Error in ==> upfirdn at 85
Y = upfirdnmex(x,h,p,q,Lx,Lh,hCols,nChans);

Error in ==> resample at 107
y = upfirdn(x,h,p,q);

Error in ==> runexternal at 73
      [SIM.data interpfilt]=resample(SIM.data,round(GUI.Rs),OldRs,10);

??? Error while evaluating uicontrol Callback.
```

When this occurs, the GUI callback threads are corrupted. You will need to close the model and GUI, and restart. Try reducing the number of significant figures in the bit rate field, or intentionally alter the bit rate slightly upward or downward and re-run the model.

8.1 Memory Monitoring

If one intends to perform many analysis runs, it is a good idea to monitor memory use. If there are signs of memory leakage (i.e., slowly increasing commitment of available RAM), then it is wise to shut Matlab down and restart the analyzer occasionally. At this time, closing Matlab is the only way to release RAM space reserved by Matlab. This is peculiar to Matlab, not the analyzer implementation.

9.1 Processing Speed

Dynamic Simulink displays produce a significant processing burden. One way to dramatically reduce processing time is closure of some or all of the run-time displays (Figure E-5 through Figure E-7). By far, the greatest improvement is realized by closing the constellation display window. One may actually want to reconfigure the scatter diagram object in the model to prevent automatic opening.

The Matlab "Real-time Workshop" option can provide another major boost to execution speed. This product compiles the application to C code, eliminating the overhead of interpretive operation. Such operation is beyond the scope of this guide.

10.1 Baseline Examples

Installation and processing integrity can be verified by comparing results with the examples in ANNEX A, which were taken from a known good installation. Baseline simulation file contents and run parameter requirements are coded in the file names:

First 4 to 8 characters identify the modulation:

BsimR4= FQPSK-B, 24 samples/symbol
JrsimR4= FQPSK-JR, 24 samples/symbol
SO_TG=SOQPSK-TG , 20 samples/symbol
KFsim=FQPSK-KF, 20 samples/symbol

fcYeZ = carrier frequency, Y x 10^Z Hz
fsYeZ = oscilloscope sample rate, Y x 10^Z Hz
rbYeZ = bit rate, Y x 10^Z bits/sec

NLA hardware sample files all use fc=$30e^6$, fs=$100e^6$, rb=$2e^6$

11.1 Data Acquisition

11.1.1 Test Equipment. In addition to the transmitter under test and a suitable pseudo-random bit pattern generator with bit strobe (clock), the following equipment (or a functional equivalent of each item) is required:

- LeCroy LC584AL oscilloscope
- RF power attenuator (50 Ω impedance)
- Anritsu MG5633A or Agilent 4432 signal generator
- Anaren model 75125 mixer
- Mini-Circuits SLP-100 low pass filter
- Mini-circuits ZLF500HLN amplifier

11.1.2 Setup. Connect the equipment in accordance with Figure E-12. The attenuator should be chosen for power handling capability consistent with the transmitter output and presentation of an RF level within the linear operating range of the mixer (-15 dBm ± 3 dB is recommended for the Anaren unit cited). The mixer local oscillator (LO) drive level (signal generator output level) should be set at the mixer manufacturer's recommended drive level for minimum distortion (+10 dBm, +1, -3 dB for the Anaren unit). The oscillator output frequency is normally set precisely 70 MHz below the desired transmitter carrier frequency. Note that 70 MHz intermediate frequency errors larger than ± 10 kHz can cause erratic performance of the analyzer Costas loop. The oscilloscope vertical amplifier input is connected directly to the post-filter amplifier via coaxial cable. Vertical amplifier input coupling is set for DC, 50 Ω impedance.

Arrangements for transfer of oscilloscope sample block sets are unique to each situation and should be implemented according to preference, oscilloscope data transfer options, and the T1MA host computer configuration.

11.1.3 Procedure. Apply power to the transmitter and modulate the signal with a pseudo-random bit pattern. Pattern length is not critical but should be longer than 2^3-1 bits. Adjust the oscilloscope horizontal sweep to view the signal envelope. For oscilloscopes with 8-bit analog to digital converters, adjust the vertical deflection sensitivity to use at least 80 percent of the oscilloscope input dynamic range, but avoid clipping. Adjust the sweep and trigger controls to capture continuous segments of at least 500k samples to internal memory upon demand, at a sample rate of 100 Ms/s. It is advisable to capture more than one sample set at each test condition in order to assess the variance of results. Significant block-to-block variation can indicate transmitter or test equipment problems.

Transfer each sample set to the modulation analyzer host file directories as directed in the T1MA instructions. Reformat the oscilloscope sample file if necessary and then apply the analyzer to each sample set.

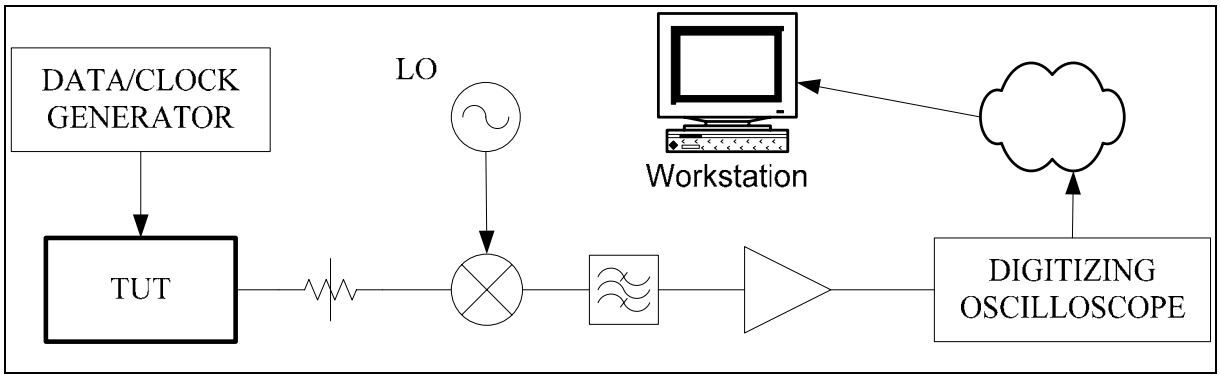

Figure E-12. Data acquisition equipment.

12.1 References for Appendix E

a. Haiping Tsou, Scott Darden, and Tsun-Yee Yan, "An Off-line Coherent FQPSK-B Software Reference Receiver", Proceedings of the International Telemetering Conference ITC/USA 2000, paper # 00-06-0, October 23-26, 2000, San Diego, California.

ANNEX A TO APPENDIX E: REFERENCE EXAMPLES

File: T1MAREFsiml_fc30e6rf100e6Rb10e6.mat

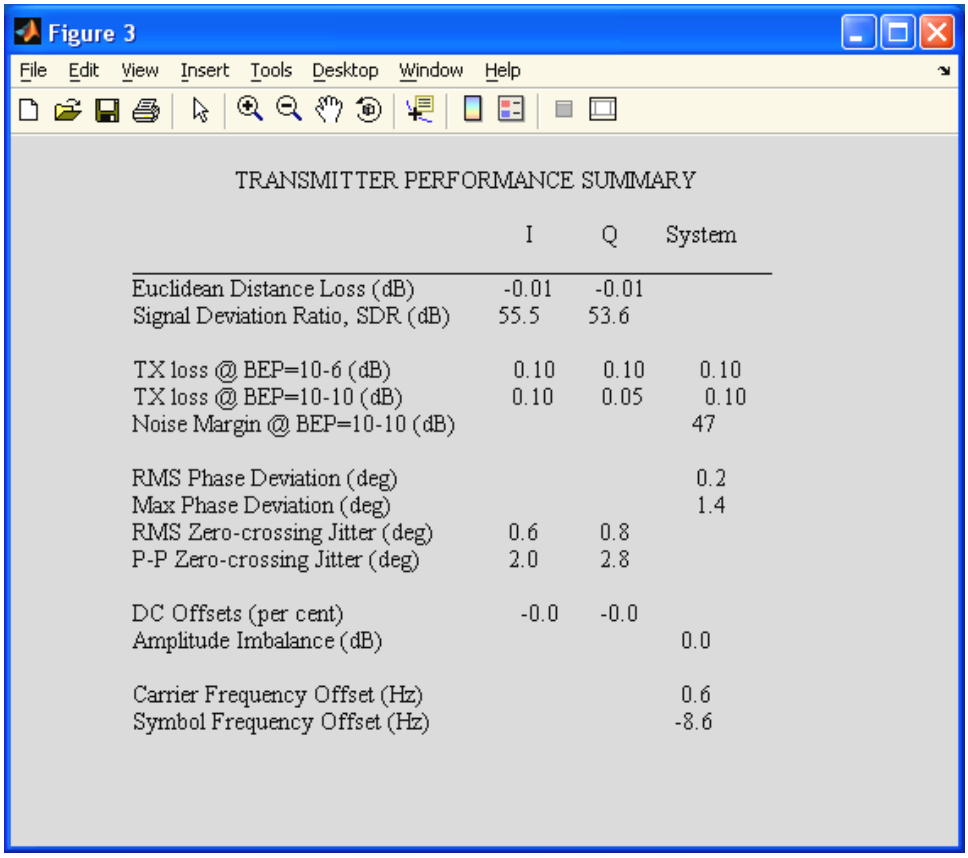

TRANSMITTER PERFORMANCE SUMMARY

	I	Q	System
Euclidean Distance Loss (dB)	-0.01	-0.01	
Signal Deviation Ratio, SDR (dB)	55.5	53.6	
TX loss @ BEP=10-6 (dB)	0.10	0.10	0.10
TX loss @ BEP=10-10 (dB)	0.10	0.05	0.10
Noise Margin @ BEP=10-10 (dB)			47
RMS Phase Deviation (deg)			0.2
Max Phase Deviation (deg)			1.4
RMS Zero-crossing Jitter (deg)	0.6	0.8	
P-P Zero-crossing Jitter (deg)	2.0	2.8	
DC Offsets (per cent)	-0.0	-0.0	
Amplitude Imbalance (dB)			0.0
Carrier Frequency Offset (Hz)			0.6
Symbol Frequency Offset (Hz)			-8.6

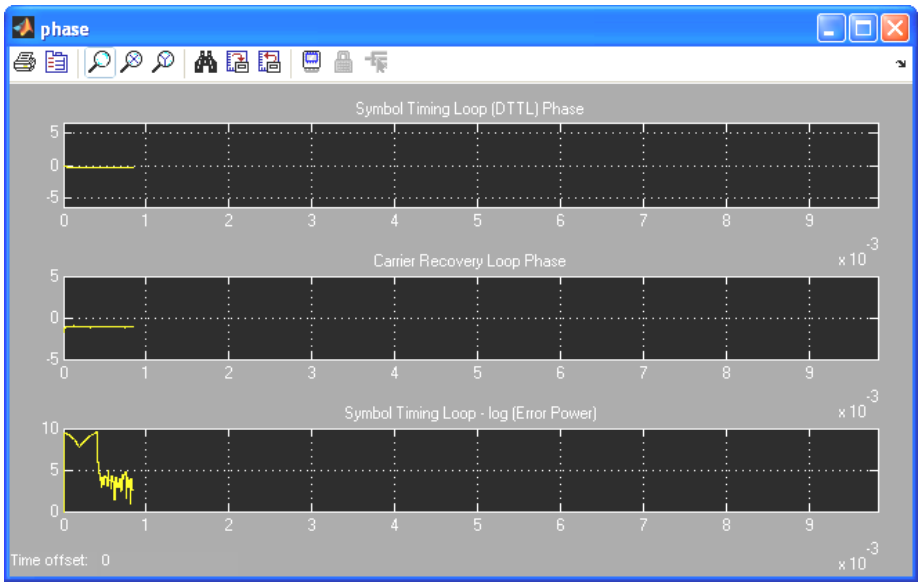

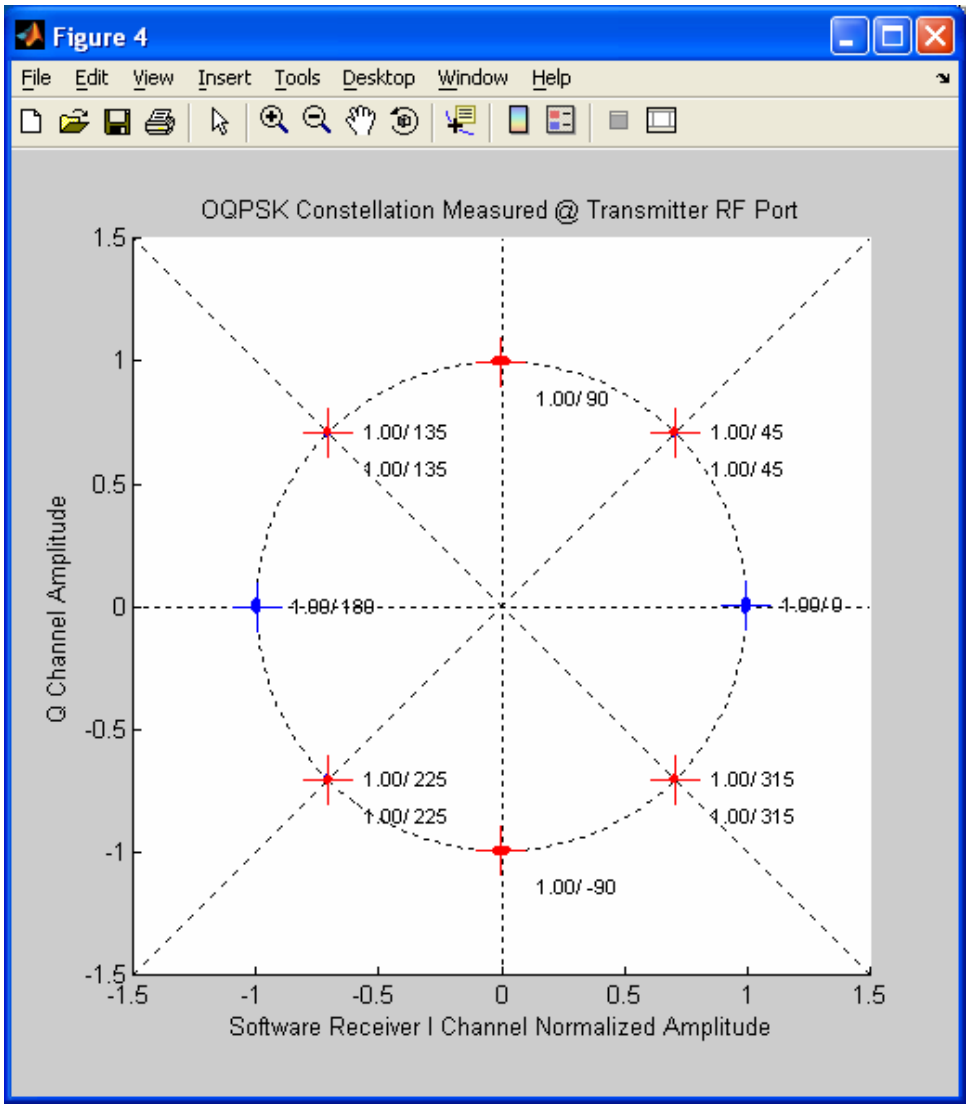
Figure 4
File Edit View Insert Tools Desktop Window Help
OQPSK Constellation Measured @ Transmitter RF Port
1.00/ 90
1.00/ 135
1.00/ 135
1.00/ 45
1.00/ 45
1.00/ 180
1.00/ 0
1.00/ 225
1.00/ 225
1.00/ 315
1.00/ 315
1.00/ -90
Q Channel Amplitude
Software Receiver I Channel Normalized Amplitude
1.5
1
0.5
0
-0.5
-1
-1.5

FILE: JRsimR4fc30e6fs96e6rb8e6.mat

Figure No. 3

File Edit View Insert Tools Window Help

TRANSMITTER PERFORMANCE SUMMARY

	I	Q	System
Euclidean Distance Loss (dB)	0.08	0.08	
Signal Deviation Ratio, SDR (dB)	32.3	32.4	
TX loss @ BEP=10-6 (dB)	0.05	0.05	0.05
TX loss @ BEP=10-10 (dB)	-0.05	-0.05	-0.05
Noise Margin @ BEP=10-10 (dB)			24
RMS Phase Deviation (deg)			2.5
Max Phase Deviation (deg)			8.0
RMS Zero-crossing Jitter (deg)	3.3	3.3	
P-P Zero-crossing Jitter (deg)	15.9	15.8	
DC Offsets (per cent)	0.0	-0.0	
Amplitude Imbalance (dB)			-0.0
Carrier Frequency Offset (Hz)			-0.0
Symbol Frequency Offset (Hz)			5.2

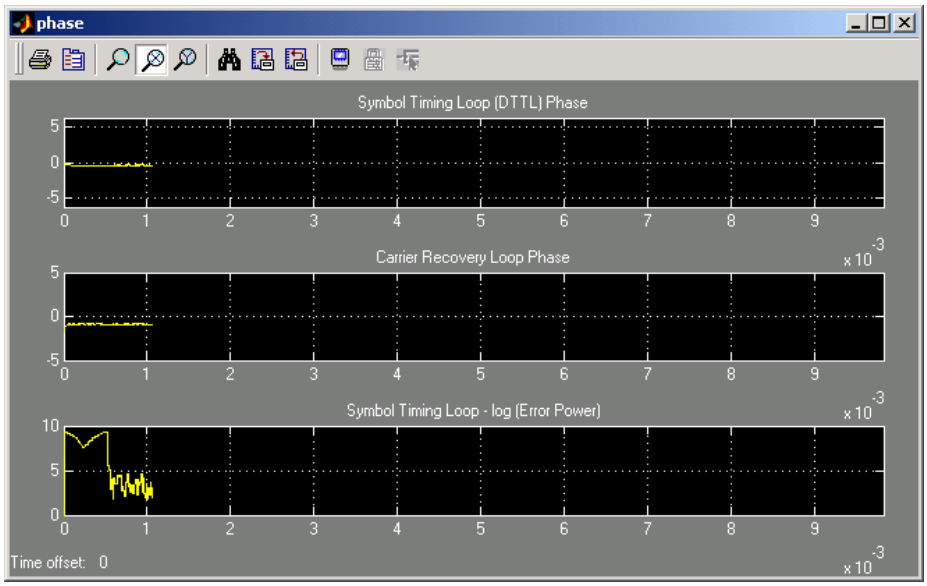

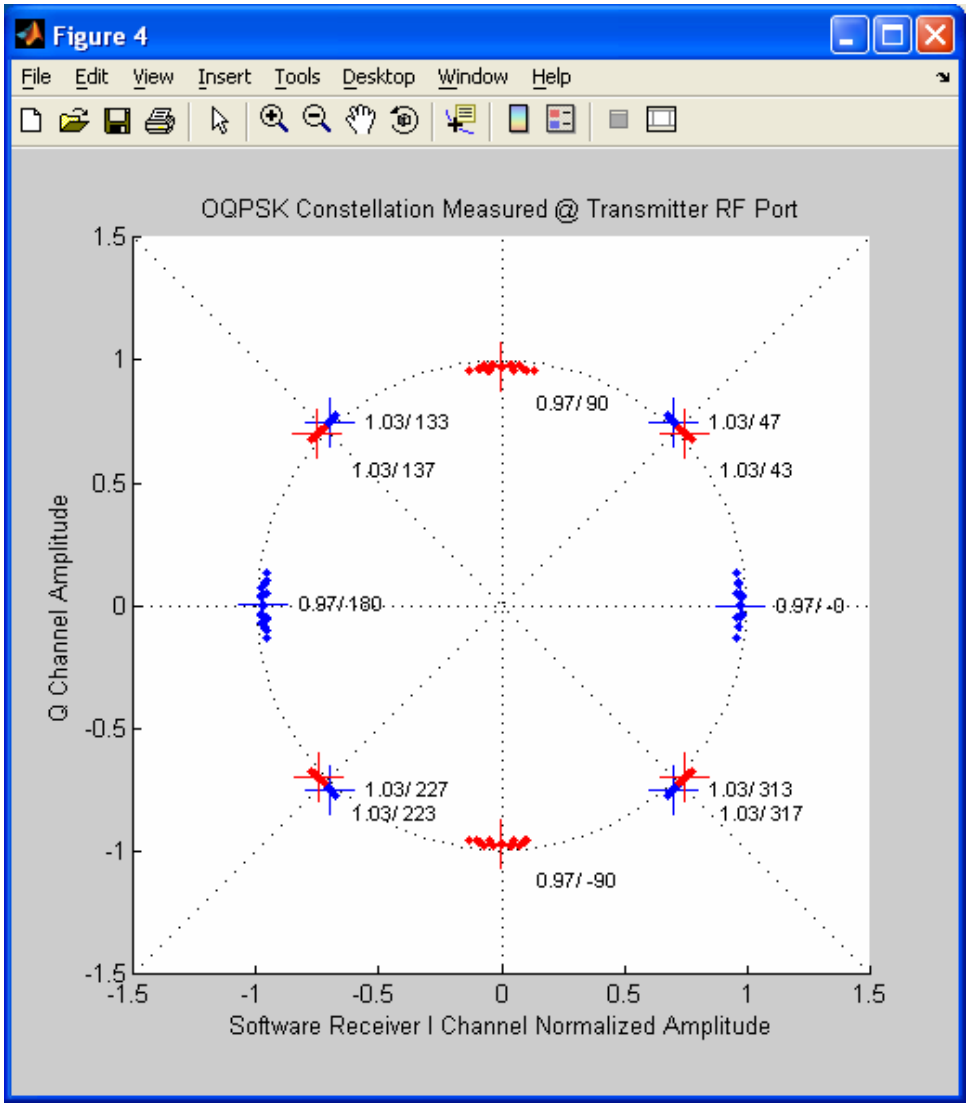
Figure 4
File Edit View Insert Tools Desktop Window Help
OQPSK Constellation Measured @ Transmitter RF Port
1.5
1
0.5
0
-0.5
-1
-1.5
Q Channel Amplitude
0.97/ 90
1.03/ 133
1.03/ 137
1.03/ 47
1.03/ 43
0.97/ 180
0.97/ -0
1.03/ 227
1.03/ 223
1.03/ 313
1.03/ 317
0.97/ -90
-1.5
-1
-0.5
0
0.5
1
1.5
Software Receiver I Channel Normalized Amplitude

FILE: SO_TG_rb2_NLA

Figure No. 3

File Edit View Insert Tools Window Help

TRANSMITTER PERFORMANCE SUMMARY

	I	Q	System
Euclidean Distance Loss (dB)	0.31	0.34	
Signal Deviation Ratio, SDR (dB)	27.9	27.8	
TX loss @ BEP=10-6 (dB)	0.70	0.75	0.75
TX loss @ BEP=10-10 (dB)	1.10	1.10	1.10
Noise Margin @ BEP=10-10 (dB)			19
RMS Phase Deviation (deg)			3.5
Max Phase Deviation (deg)			9.4
RMS Zero-crossing Jitter (deg)	3.3	3.3	
P-P Zero-crossing Jitter (deg)	13.6	13.7	
DC Offsets (per cent)	-0.0	-0.0	
Amplitude Imbalance (dB)			0.0
Carrier Frequency Offset (Hz)			-94.2
Symbol Frequency Offset (Hz)			-1.4

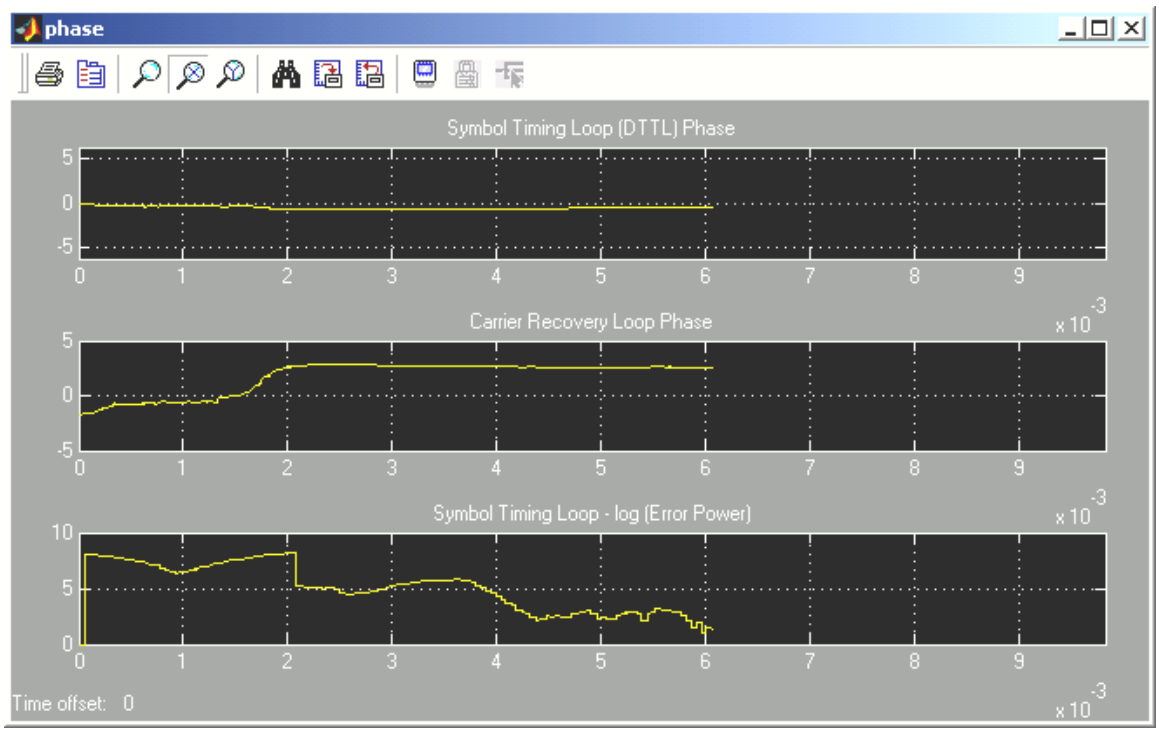

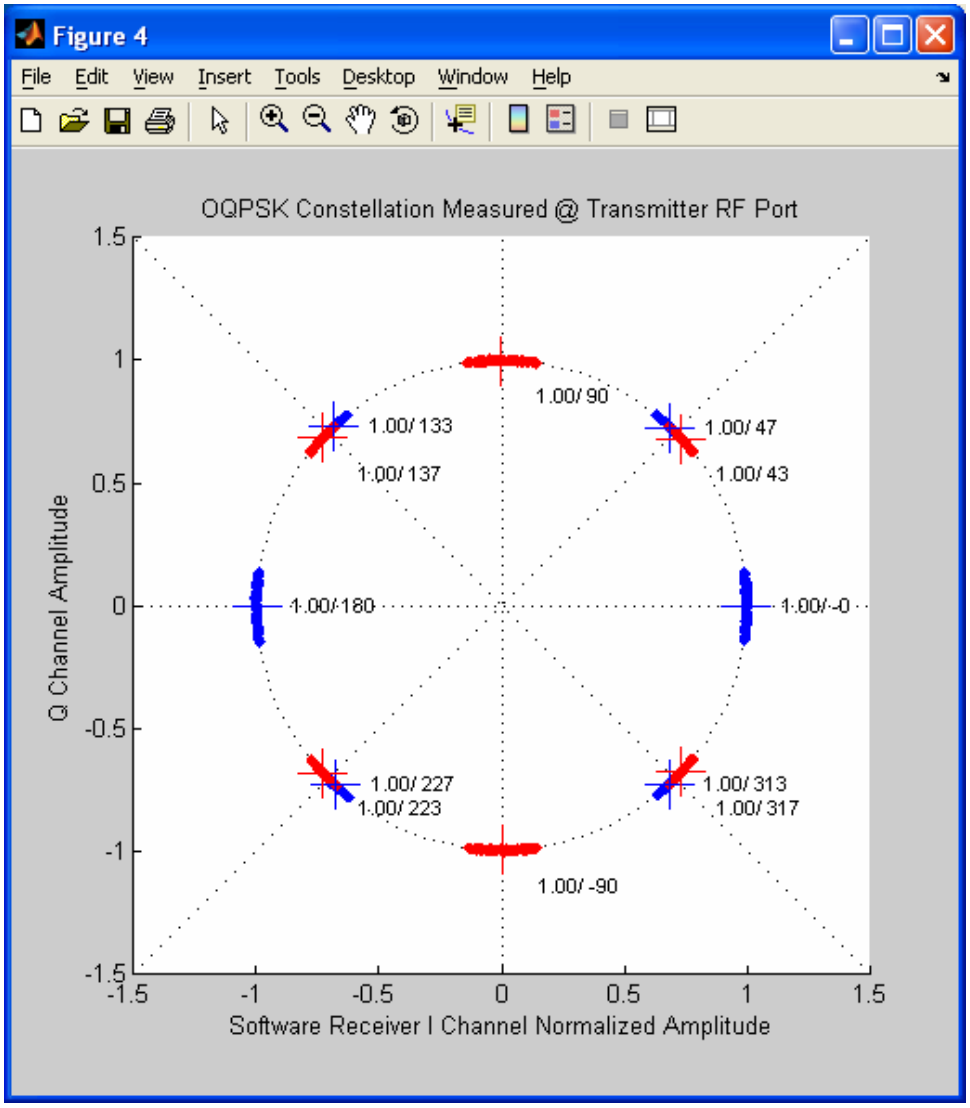
Figure 4
File Edit View Insert Tools Desktop Window Help
OQPSK Constellation Measured @ Transmitter RF Port
1.00/ 90
1.00/ 133
1.00/ 47
1.00/ 137
1.00/ 43
1.00/ 180
1.00/ -0
1.00/ 227
1.00/ 223
1.00/ 313
1.00/ 317
1.00/ -90
Q Channel Amplitude
Software Receiver I Channel Normalized Amplitude
1.5
1
0.5
0
-0.5
-1
-1.5

APPENDIX F

APPLICATION NOTE

EVALUATION OF

CONSTANT ENVELOPE
OFFSET QUADRATURE PHASE SHIFT KEYING TRANSMITTERS
WITH A SOFTWARE BASED SIGNAL ANALYZER

Robert P. Jefferis
TYBRIN Corporation

TABLE OF CONTENTS

1.1 Introduction F-3

2.1 Reference Signal and Receiver Filters F-4

3.1 Analyzer Operation and Data Products F-6

4.1 Distance Loss and Signal Deviation Ratio (SDR) F-8

5.1 BEP, Transmitter Loss, and noise Margin F-10
5.1.1 Bit Error Probability Projection F-10
5.1.2 Transmitter Loss F-11
5.1.3 Noise Margin F-12

6.1 Phase Trajectory and jitter F-12

7.1 Example F-14

8.1 Variant Identification F-18

9.1 Analyzer Limitations F-19

10.1 Summary F-19

11.1 References F-20

TABLES

Table 1 - Lower Bounds of Distance Loss/SDR (dB) F-9

Table 2 - Lower Bounds of TX Loss at Benchmarks F-11

Table 3 - Upper Bounds of Noise Margin (dB) F-12

Table 4 - Lower Bounds of RMS/maximum Trajectory Phase Deviation (degrees) F-14

Table 5 - Baseline RMS/peak-peak Jitter (degrees) F-14

1.1 Introduction

In 2004 the United States Department of Defense (DoD) Range Commander's Council added Feher's patented quadrature phase shift keying (FQPSK-JR [1]) and shaped offset quadrature phase shift keying (SOQPSK-TG) modulation to its telemetry standards, recognizing FQPSK-JR and SOQPSK-TG as inter-operable alternatives to FQPSK-B modulation [2]. These techniques are notable for good radio frequency (RF) spectrum efficiency and compatibility with non-linear amplifiers (NLAs).

The DoD Advanced Range Telemetry (ARTM) project sponsored initial development of airborne transmitter (TX) and companion detection equipment for these waveforms. One challenge has been detailed TX signal quality evaluation, especially in light of three modulation alternatives. RF power spectrum and additive white Gaussian noise (AWGN) detection performance measurements are straightforward with standard laboratory equipment and suitable demodulators. However, RF power spectra and bit error probability (BEP) data will not normally reveal subtle TX defects. Many test equipment manufacturers produce vector signal analyzers designed for detailed examination of widely used modulation methods. Linear systems in particular have a rich set of metrics like error vector magnitude (EVM) and its spin-off metrics to diagnose subtle problems. To date, these manufacturers have not programmed their instruments to "understand" 4-ary CE OQPSK signals. This void was partially filled when the Jet Propulsion Laboratory (JPL) completed a "software receiver" for FQPSK signals [3]. It demodulates short segments of TX RF signals captured by digitizing oscilloscopes and produces EVM and EVM-related signal analysis products. Unfortunately, EVM is of limited value because CE OQPSK transmitters usually incorporate a NLA. NLA models sufficiently precise to predict intra-symbol amplitude values in the context of EVM are not available.

In order to bypass these limitations, the JPL software receiver was changed to emphasize generic measurements reflecting performance characteristics common to all CE OQPSK signals. EVM analysis was removed and the graphical user interface (GUI) was modified to incorporate the data products described below. The demodulator, Costas loop, and digital transition timing loop (DTTL) symbol timing loops were retained. The software analyzer represents a nearly ideal single symbol coherent sample and hold (SH) detector. Its basic structure is shown in Figure F-1.

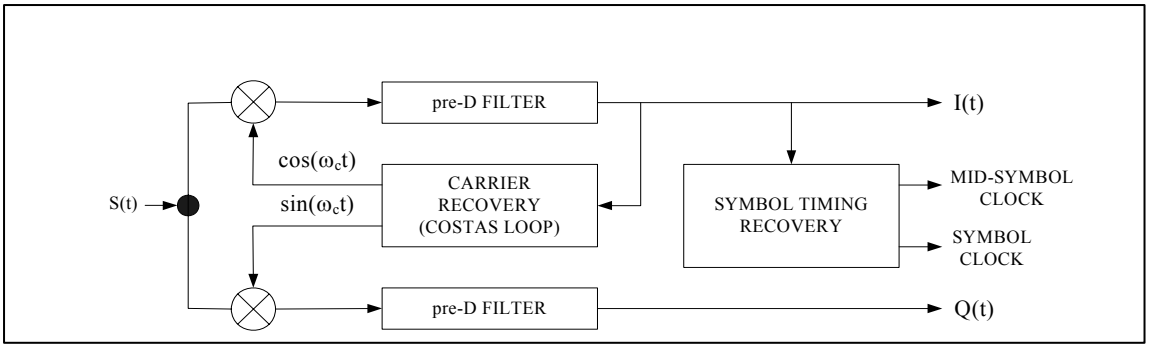

Figure F-1. Analyzer structure.

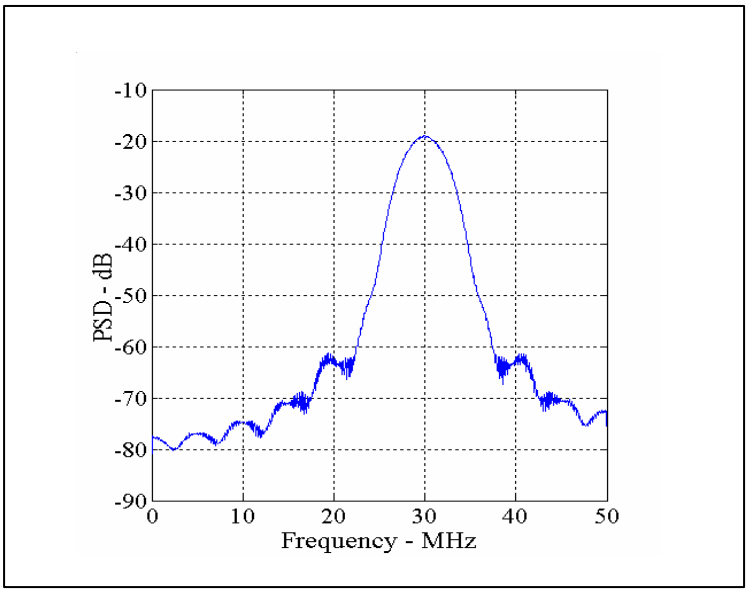

Figure F-2. Reference power spectrum.

2.1 Reference Signal and Receiver Filters

At test time, transmitters are viewed as closed systems. The only signal available for evaluation is that emanating from the RF port. The tier 1 modulation analyzer (T1MA) compares signals to an ideal, linearly amplified CE OQPSK reference signal that is based on the constant envelope FQPSK-JR half-symbol wavelet set designed by Formeister and Jefferis [1]. However, FQPSK-JR post-wavelet assembly filters and interpolation filters are omitted yielding the power spectrum shown in Figure F-2. This point of reference has four desirable features.

It is constant modulus at *all* possible sample instants, it does not produce *any* inter-symbol interference (ISI), it does not produce zero-crossing (phase) jitter, and it is easily described with closed form equations. Otherwise, it possesses the essential attributes of all relevant CE OQPSK variants, i.e., suppressed carrier double sideband RF signaling that emerges within conventional coherent QPSK demodulators as an OQPSK signal with the peculiar characteristic of binary in-phase (I) and quadrature phase (Q) channel symbol waveforms possessing two possible mean energy levels per state at mid-symbol sampling instants. Thus, we consider this basis signal to offer the best synchronization and detection performance potential possible in a coherent, sample and hold (SH) detection scheme.

Figure F-3 shows the reference signal in three constellation forms. Figure F-3a is a conventional QPSK constellation. Baseband in-phase (I) and quadrature phase (Q) signals are sampled simultaneously at mid-symbol after removing the bit interval (τ_b) inter-channel delay. Note the 16 points peculiar to these waveforms. The “OQPSK constellation” in 3b is considered a more useful presentation for diagnostics. Inter-channel delay is retained. I and Q are sampled at mid-

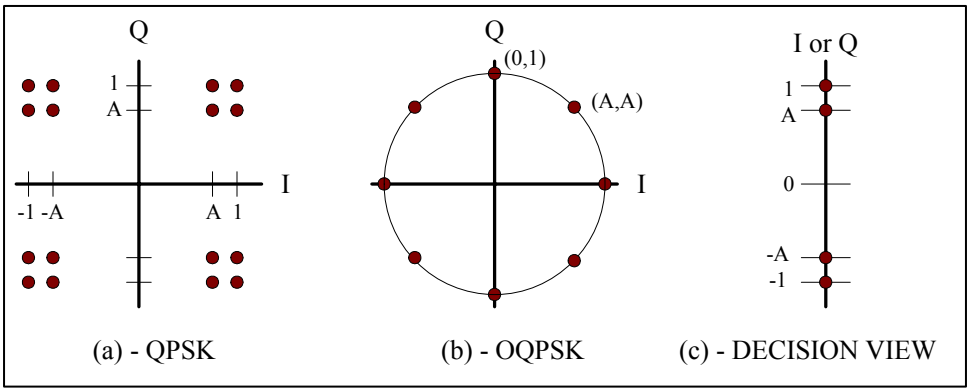

Figure F-3. Constellation forms.

symbol *and* at symbol end points. In this domain the *reference* has eight unique mean target vector (TV) end points that lie on a circle. However, ISI present in the real signals cause the TVs at odd multiples of 45 degrees to split into pairs of 2 sets, creating 12 unique TV sets. The third graph (3c) is a single dimension histogram of I and Q signals at their respective mid-symbol sampling instants. This is the sample set actually processed by independent I and Q decision circuits in a real SH detector. Note that 4 levels are associated with each channel, a pair of high energy or *outer* state levels and a pair of low energy or *inner* TV state levels. The inner levels correspond to the OQPSK constellation sets at odd multiples of 45 degrees.

From the standpoint of product testing, it is unfortunate that these modulations were adopted without standardization of detection filters. Accordingly, commercial demodulators tend to be proprietary in this regard. With the express purpose of choosing a reasonable *non-proprietary* compromise applicable to all signals, detection filters employed here are straightforward equiripple, linear phase, finite impulse response approximations to ideal low pass filters. The wide response curve in Figure F-4 is the pre-detection (pre-D) filter. Its bandwidth/symbol period product is $B\tau_s = 2.4$. It is used to capture signal features with negligible distortion. Its wide bandwidth is justified because the test is conducted at very high signal to noise ratios, noise and distortion introduced by the test equipment is negligible, and there are no interfering signals.

The narrow response curve is the final detection filter with normalized bandwidth $B\tau_s = 0.65$. Simulations based on the technique developed by Lee [4] have shown this detection filter to be a reasonable compromise between noise bandwidth and detection loss. It is not optimum in any sense, but does create a consistent evaluation domain for CE OQPSK signals.

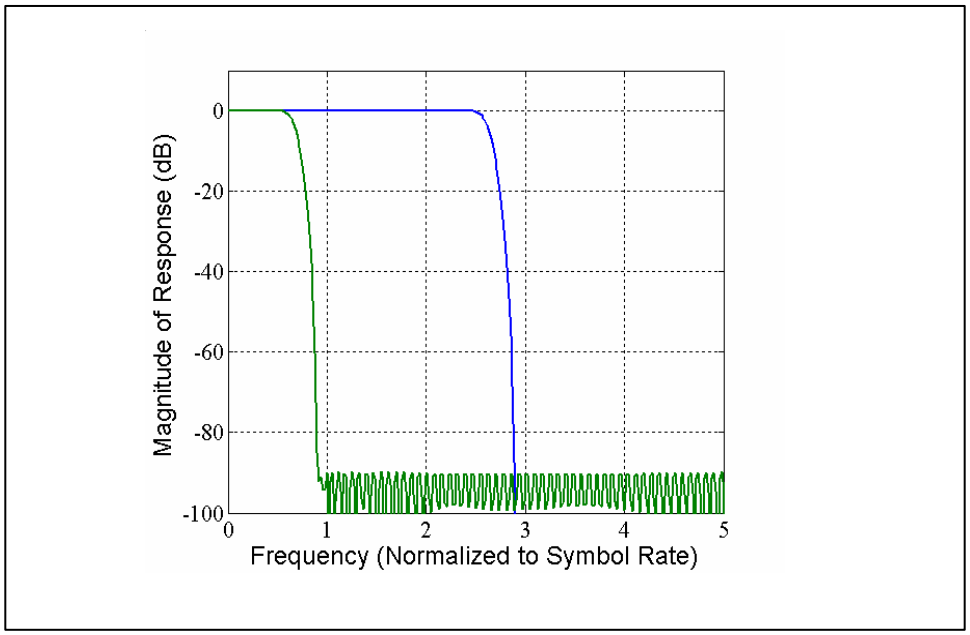

Figure F-4. Detection Filters.

3.1 Analyzer Operation and Data Products

Signals are sampled with the equipment shown in Figure F-5. A random binary data sequence is applied to a TX under test (TUT) at some desired bit rate. The signal is attenuated and translated to a convenient intermediate frequency (IF), typically 70 MHz, with a high quality mixer and low noise local oscillator (LO). A digitizing oscilloscope samples the IF signal. Normally, 1M samples are taken at a sample rate of 100M samples/second, intentionally aliasing the signal to a carrier frequency of 30 MHz. Sample blocks are transferred by computer network to the analyzer software host.

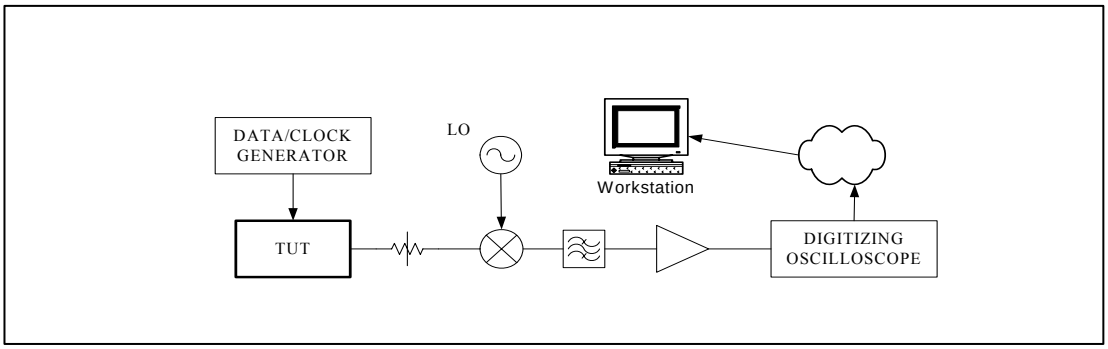

Figure F-5. Transmitter Test Equipment.

With the exception of sample rate and detection filter design, signals are processed in much the same manner as well designed commercial SH demodulators. Offsets are identified and removed from the baseband signals. Inter-channel amplitude (gain) imbalance is identified and amplitudes are adjusted to produce consistent scaling. However, in order to extract detailed information, sample files are processed in two distinct phases at a sample rate of $f_s = 20$ samples per symbol (sps), which is substantially higher than rates used in practical demodulators.

A Simulink®™ model demodulates the sample block. The operator sees three dynamic display windows. An oscilloscope window shows progression of Costas loop phase, DTTL phase, and DTTL loop error power versus equivalent real time. Eye diagrams and a constellation scatter diagram linked to the pre-D filter are also presented. Collectively, these displays clearly indicate sample block integrity and whether or not the signal contains anomalies serious enough to cause erratic demodulator behavior.

Carrier loop bandwidth is set to the lesser value of $0.001R_s$ or 10 kHz, where R_s is the symbol rate. DTTL bandwidth is set at the lesser value of $0.0005R_s$ or 5 kHz. These values are consistent with the range used in some commercial products for operation between 1 and 20 Mb/s and have been shown to work well in this application. Upon DTTL synchronization, the model captures samples spanning 4000 contiguous bit periods and stores 3 vectors. The first vector contains all samples of the complex baseband signal resampled at 20 samples per symbol. These I and Q samples are a complex time series:

$$z_T\left(\frac{nt}{f_s}\right) \equiv z_T(n) = I_T\left(\frac{nt}{f_s}\right) + jQ_T\left(\frac{nt}{f_s}\right) \tag{1}$$

where

The subscript "T" denotes pre-D filter samples.
The 2nd vector is a mid-symbol sample pointer for the I channel.
The 3rd vector is a bit boundary sample pointer.

Processing then transfers to a series of Matlab®™ scripts. Phase 2 starts by creating the normalized vector $z'_T(n) = I'(n) + jQ'(n)$ wherein offsets are removed and amplitudes are scaled as described below. The synchronization vectors are used to sort $z'_T(n)$ into real valued OQPSK constellation coordinate sets $C^{e,s}_{f,c}$ where the 12 TV subsets are indexed by a combination of superscripts and subscripts. The e denotes energy level (e=h denotes high energy points, e=l denotes inner points). The s denotes the sign of the "current" sample. The letter f is the filter group association (f=T denotes pre-D filter samples, f=R denotes post detection filter samples). c=I indicates that the I channel coordinate is the sample being presented to decision circuits, i.e., the "current" sample, and c=q the opposite case.

I'_T and Q'_T are passed through the final detection filter to create the decision sample vector:

$$z_R(n) = I_R(n) + jQ_R(n).$$

Post-detection filter mid-symbol sample groups $C_{R,c}^{e,s}$ are extracted from $z_R(n)$ to represent symbol amplitude samples that a hardware SH demodulator presents to decision circuits.

Two groups of analysis products are created.

- The <u>first group</u>, associated with z'_T, includes tabular and graphic presentations of:
  - Euclidean distance loss of the inner TVs
  - Signal to noise ratio of *inner* TV samples
  - Phase trajectory deviation, and
  - Zero crossing jitter

- The <u>second group</u>, derived from z_R, includes:
  - Predicted detection performance at BEP benchmark values and noise margin
  - Presentations of normalized offsets and gain imbalance
  - Availability of graphic displays of eye patterns, pre-D constellations, detector sample distributions, RF power spectrum, and baseband power spectrum

4.1 Distance Loss and Signal Deviation Ratio (SDR)

Euclidean distance of the inner TVs strongly dominates decision error occurrence at high signal to noise ratios. Therefore, signal examination focuses on the inner constellation points in terms of geometric distance and symbol-to-symbol deviation of amplitude from mean values. Signal power is normalized in the conventional manner, i.e., given an average RF signal power P at the demodulator input then

$$P\tau_s \equiv \overline{E}_s = 2\overline{E}_b \tag{2}$$

where

E_s is energy expended in a symbol interval
E_b is energy expended in a bit interval

Then the reference signal's inner Cartesian distance is $\sqrt{2}$. Euclidean distance loss λ is the ratio of measured mean inner TV distance and the reference TV distance. It is computed independently for I and Q with the relation (I channel shown):

$$\lambda_I \equiv -20\log\left[\min\left(\frac{2\left|\overline{C}_{T,i}^{I,s}\right|}{\sqrt{2}}\right)\right] \quad ,s = +,- \tag{3}$$

Over-bars denote mean values. Measured inner TV signal power is computed for each channel with equation (4) where L denotes the number of constellation subset members.

$$\bar{S}_T = \frac{1}{L_{Ti}^{l+} + L_{Ti}^{l-}} \left(\sum_{l=1}^{L_{Ti}^{l+}} \left[C_{T,i}^{l,+}(l) \right]^2 + \sum_{l=1}^{L_{Ti}^{l-}} \left[C_{T,i}^{l,-}(l) \right]^2 \right) \tag{4}$$

Systematic ISI related deviation from the mean inner TV points is considered a contributor to all noise energy produced by the transmitter in the detection bandwidth. Equation (5) is used to compute inner TV noise power.

$$\bar{N}_T = \frac{1}{L_{Ti}^{l+} + L_{Ti}^{l-}} \left(\sum_{l=1}^{L_{Ti}^{l+}} \left[C_{T,i}^{l,+}(l) - \bar{C}_{T,i}^{l,+} \right]^2 + \sum_{l=1}^{L_{Ti}^{l-}} \left[C_{T,i}^{l,-}(l) - \bar{C}_{T,i}^{l,-} \right]^2 \right) \tag{5}$$

Signal deviation ratio in dB is then defined:

$$SDR_I \equiv 10 \log \left(\frac{S_T}{N_T} \right) \tag{6}$$

Q channel values are computed similarly. Note that the reference waveform, by definition, will produce $SDR = \infty$ because it produces no ISI. Each CE OQPSK variant will, in principle, produce unique symbol-to-symbol deviation of its inner TV values from those of the reference waveform. Thus, each variant will have an associated lower bound for λ and SDR values. These bounds change when a NLA is present. Table F-1 lists practical lower bounds for linear and NLA cases. Linear simulations were based on ideal 20 sps 70 MHz IF sample sets created in Matlab. The NLA baselines were obtained with laboratory grade TX emulators driving a linear amplifier hard into saturation. Note that the NLA serves as a normalizing component in the sense that distance loss for all three techniques nearly converge. Note that SOQPSK-TG has the lowest lower SDR bound by a fairly significant margin. This is due to the fact that SOQPSK-TG produces the largest amount of ISI[2].

Table F-1. Lower Bounds of Distance Loss/SDR (dB)

Case	FQPSK-B	FQPSK-JR	SOQPSK-TG
Linear	0.1 / 30	0.1 / 32	0.3 / 28
w/NLA	0.2 / 35	0.3 / 31	0.3 / 28

Real transmitters produce larger values of distance loss due to phase noise and a host of possible defects. Examination of both distance loss and SDR components will indicate whether significant signal degradation is due to distortion, excess noise, or a combination of these

[2] SOQPSK-TG was created in concert with the development of a particular proprietary matched detection filter.

problems. A well designed transmitter should produce SDR values no worse than 3-4 dB below the applicable table value.

It is important to note that distance loss and SDR values are independent of detection filter characteristics. They are sensitive *indirect* indicators of TX signal impact on overall system performance.

5.1 BEP, Transmitter Loss, and Noise Margin

5.1.1 Bit Error Probability Projection. Symbol detection in I and Q channels is treated as independent binary decision processes. The classic formula for symbol error probability P_s in a binary phase shift keying (BPSK) system is used to project BEP using the *particular* detection filter shown in Figure F-4. Given a single symbol observation interval, P_s is given by [5]:

$$P_s = \frac{1}{2}\mathrm{erfc}\sqrt{\frac{E_s}{2N_0}} = \frac{1}{2}\mathrm{erfc}\sqrt{\frac{E_b}{N_0}} = \frac{1}{2}\mathrm{erfc}\left(\frac{d}{2\sqrt{N_0}}\right) \tag{7}$$

where *erfc* is the complimentary error function, $N_0/2$ is the power spectral density of AWGN introduced between the TX and detection filter, and *d* represents the Euclidean distance between decision amplitudes. Strictly speaking, equation (5) is only valid for a receiver that implements an "optimum" detection mechanism. However, useful projections of detection performance can be realized by replacing E_s or E_b with appropriate mean values in this application.

The reference signal possesses eight unique symbol interval baseband waveforms [6]. Without loss of generality, we set reference signal scaling for peak outer TV amplitudes of unity which places all reference signal TV endpoints on a unit radius circle as in Figure F-3b.

The BEP estimation starts with an ordered set $\gamma = \{\gamma_1, \gamma_2, ..., \gamma_J\}$ of bit energy to noise density ratio (E_b / N_0) values closely spaced in the range of interest (6 to 20 dB). I and Q samples are scaled such that the rms amplitude of that channel possessing the larger mean amplitude over the sample set *prior* to normalization equals that of the reference signal.[3] The average symbol energy $\overline{E}_s$ of each channel is computed from I'_T and Q'_T. Corresponding channel specific noise density sets are computed:

$$\{N_0\} = \frac{1}{2}\frac{\overline{E}_s}{10^{\gamma/10}} \tag{8}$$

[3] This guarantees a worst case analysis in terms of the range of amplitude control methods used in commercial demodulators.

Noise variance in the detection bandwidth is determined for each channel with the relation

$$\left\{\sigma_N^2\right\} = \frac{N_0}{2}\int_{-\infty}^{\infty} h_R^2(t)dt \tag{9}$$

where $h_R(t)$ is the impulse response of the detection filter.

Each sample block contains 2K symbols, K per channel. Average BEP versus E_b / N_0 of the I channel is computed as:

$$\left\{\overline{P}_s(j)\right\} = \frac{1}{2K}\sum_{k=1}^{K} \operatorname{erfc}\left(\frac{\left|C_{Ri}^{**}(k)\right|}{\sqrt{2\sigma_N^2(j)}}\right) \qquad j = 1,2,\ldots,J \tag{10}$$

where "*" denotes summation over all index sets.

5.1.2 Transmitter Loss. The TX contributions to system performance loss *relative to the reference signal* are estimated at 2 benchmark BEP values P_{b1}, P_{b2} by searching $\overline{P}_s$ for the value closest to each benchmark. Corresponding values $\gamma_{P_{b1}}, \gamma_{P_{b2}}$ are compared to those of the reference waveform at the benchmarks. This estimate is repeated for joint BEP considering I and Q and is reported as the system level TX loss. Table F-2 lists practical lower bounds for TX loss for

$P_{b1} = 1x10^{-6}$ and $P_{b2} = 1x10^{-10}$.

Table F-2. Lower Bounds of TX Loss at Benchmarks

Case	FQPSK-B	FQPSK-JR	SOQPSK-TG
Linear	0.1 / 0	0.1 / -0.1	0.8 / 1.1
w/NLA	0.2 / 0.2	0.2 / 0.2	0.8 / 1.2

These estimates of TX loss are the most reliable and direct indicators of transmitter signal quality. When using FQPSK-B and FQPSK-JR signals, the detection filter produces loss figures that can be considered a loose upper bound on performance that would be measured with high quality commercial demodulators. Experiments to date have shown estimated losses to be on the pessimistic side by as much as 0.3 dB at P_{b1} when signal quality is good. However, estimates become less pessimistic when the TUT signal contains significant distortion or excessive phase noise.

The nature of SOQPSK-TG is such that the detection filter produces a much tighter upper bound when results are compared to a commercial SH demodulator. However, the prediction

will still be pessimistic when results are compared to the performance of a SH demodulator utilizing pseudo matched filters or a trellis decoder.

5.1.3 Noise Margin. Another performance indicator is the amount of noise headroom or the noise margin available for operation at $P_{b2} = 1x10^{-10}$. This value is used because some applications strive for essentially error free operation without channel coding. For practical purposes, equation (5) represents the TUT noise floor. Values of σ_N^2 associated with $\gamma_{P_{b2}}$ are used to estimate the amount noise that must be added at *detection filter outputs* to create an irreducible BEP floor P_{b2}. Assuming AWGN, σ_N^2 is first referred back to *external* noise power:

$$N_{Added} = 2\sigma^2_{N_{Pb2}} \frac{\int_{-\infty}^{\infty} h_T^2(t)dt}{\int_{-\infty}^{\infty} h_R^2(t)dt} \tag{11}$$

TX noise margin at P_{b2} in dB is then estimated:

$$M_N\big|_{P_{b2}} \equiv -10\log\left(1 + \frac{N_{Added}}{N_T}\right) \tag{12}$$

Table F-3 list upper bounds of M_N *using this particular detection filter.*

Table F-3. Upper Bounds of Noise Margin (dB)

Case	FQPSK-B	FQPSK-JR	SOQPSK-TG
Linear	22	24	19
w/NLA	26	23	18

Measured noise margins more than 3 dB below the applicable table value should be considered cause for concern and further investigation.

6.1 Phase Trajectory and jitter

Examination of carrier phase trajectory and its deviation from expected paths can lend insight to systematic and incidental TX defects. The reference signal wavelets produce a kernel of 8 bit interval phase trajectory paths. Carrier phase may remain constant in accordance with equation (13).

$$\theta(t) = \tan^{-1}\left(\pm\frac{A}{A}\right) = \pm\frac{\pi}{4} \tag{13}$$

The phase may change by 45 degrees in one of four ways according to equation (14) and Equation (15):

$$\theta(t) = \tan^{-1}\left(\pm\frac{\sqrt{1-A^2\cos^2\beta(t)}}{A\cos\beta(t)}\right) \quad , \; 0 < t \le \tau_b \tag{14}$$

$$\theta(t) = \tan^{-1}\left(\pm\frac{\sqrt{1-A^2\sin^2\beta(t)}}{A\sin\beta(t)}\right) \quad ,0 < t \le \tau_b \tag{15}$$

Finally, the phase may change 90 degrees in one of 2 ways according to equation (16):

$$\theta(t) = \tan^{-1}\left(\pm\frac{\sin\beta(t)}{\cos\beta(t)}\right) = \pm\beta(t) \; , \; 0 < t \le \tau_b \tag{16}$$

where

$$A = \sqrt{2}/2$$
$$\beta(t) = \pi t/\tau_s$$

These functions and the inverses of equations (14) through (16) produce the 14 possible bit-interval phase paths shown in Figure F-6. The green curves are ideal and the black traces show analyzer results from the reference waveform baseline simulation file.

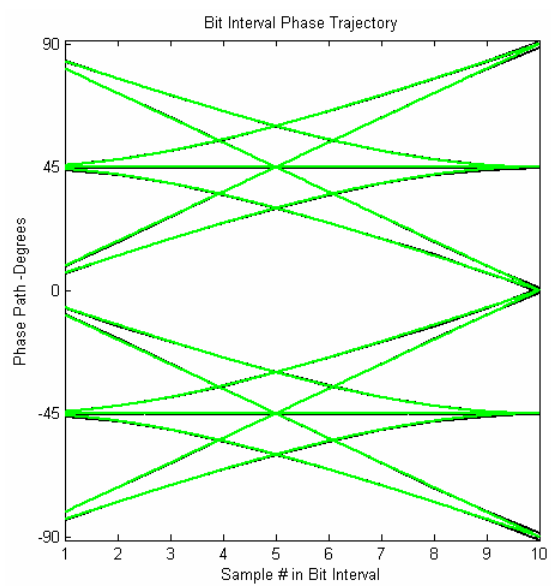

Figure F-6. Bit Interval Carrier Phase Trajectories of Reference Signal.

Intra-symbol carrier phase evolution (pre-D) of the TUT is compared to that of the reference signal on a bit-by-bit basis with these functions. Table F-4 lists lower bounds for RMS and maximum phase deviation.

Table F-4. Lower Bounds of RMS/maximum Trajectory Phase Deviation (degrees)

Case	FQPSK-B	FQPSK-JR	SOQPSK-TG
Linear	2.7 /8.4	2.5 / 8	4.0 / 11
w/NLA	1.2 / 4.5	3.1 / 8	4 .1 / 11

Excessive I and Q zero crossing jitter can disturb carrier and symbol timing recovery mechanisms. The CE OQPSK modulations create significant ISI related jitter. Transmitters exhibiting jitter much beyond that inherent in the technique should be used with caution. Peak-to-peak and rms jitter is computed by projecting z' outer constellation point samples onto the symbol timing axes. Realistic lower bounds are listed in Table F-5.

Table F-5. Baseline RMS/peak-peak Jitter (degrees)

Case	FQPSK-B	FQPSK-JR	SOQPSK-TG
Linear	3.5 / 17	3.3 / 16	4.4 / 16
w/NLA	1.8 / 8	4.1 / 15	4.5 / 17

7.1 Example

One example, presented here in detail, was chosen as a good example of unexpected behavior that commercial products may exhibit and shows how the T1MA can be used for signal diagnosis and sleuthing. The TUT was a 5-Watt S-band FQPSK-JR unit operating at a carrier frequency of 2270.5 MHz and bit rate of 5 Mb/s. Figure F-7 is the summary analysis. We first note a significant difference in I versus Q channel TX loss, but overall (joint) detection loss is quite reasonable. Predicted detection curves are shown in Figure F-8. Note how the individual I and Q curves are separated from the joint "PREDICTED" curve. There is obviously a symmetry problem within this transmitter, albeit, a minor one. Noting the good SDR values, we know immediately that distortion related distance loss is the dominant factor. This is consistent with the reported difference in distance loss. Phase deviation and Jitter are very close to ideal bounds and the baseband power spectrum in Figure F-9 is clean, indicating that this sample contains no significant spurious noise problems. However, the constellation in Figure F-10 reveals a peculiar TV magnitude distribution. Mean outer TV magnitudes are less than unity and mean inner TV magnitudes are greater than unity. All mean TV angles exhibit good symmetry. The Cartesian histogram in Figure F-11 is now useful. Amplitude imbalance is obvious and we note that the difference between mean inner and outer TV levels on the I channel is slightly smaller than normal. This explains the TV magnitude distribution but not the source of distortion. Normally, we would simply assume that this behavior is due to subtle interactions of modest baseband

signal generator or modulator imbalance with a non-linear power amplifier. Referring back to Figure F-7, note that both Euclidean distance loss figures are smaller than the bound listed for FQPSK-JR NLA operation. Also note that the RMS zero crossing jitter is smaller than expected.

TRANSMITTER PERFORMANCE SUMMARY

	I	Q	System
Euclidean Distance Loss (dB)	0.09	0.20	
Signal Deviation Ratio, SDR (dB)	30.1	30.2	
TX loss @ BEP=10-6 (dB)	0.25	0.90	0.65
TX loss @ BEP=10-10 (dB)	0.35	1.05	0.90
Noise Margin @ BEP=10-10 (dB)			21
RMS Phase Deviation (deg)			4.3
Max Phase Deviation (deg)			13.0
RMS Zero-crossing Jitter (deg)	3.4	3.6	
P-P Zero-crossing Jitter (deg)	15.6	15.9	
DC Offsets (per cent)	-0.9	-1.8	
Amplitude Imbalance (dB)			0.1
Carrier Frequency Offset (Hz)			-2095.9
Symbol Frequency Offset (Hz)			21.5

Figure F-7. Transmitter performance summary.

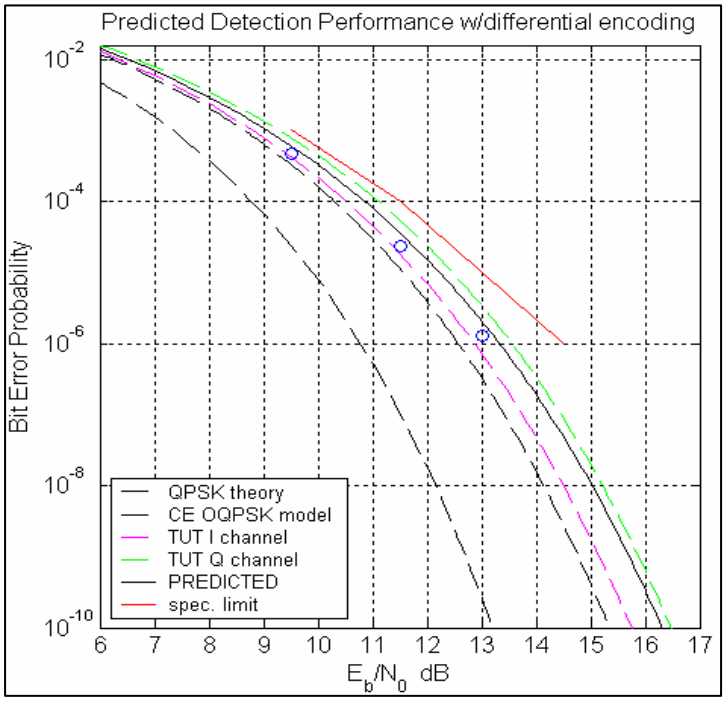

Figure F-8. Predicted detection performance with differential encoding.

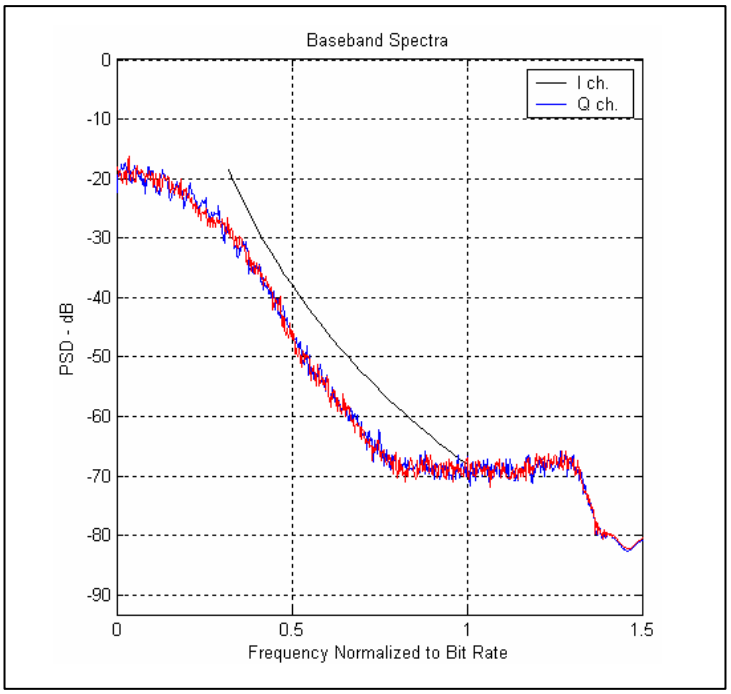

Figure F-9. Baseband spectra.

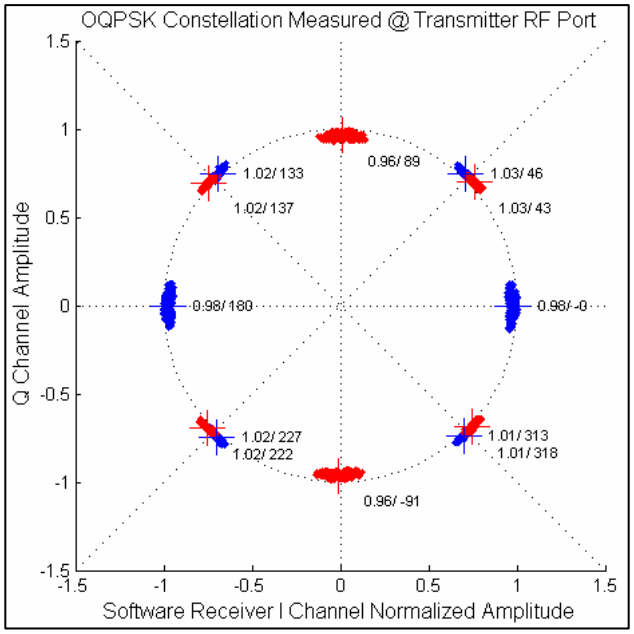

Figure F-10. OQPSK Constellation measured at transmitter RF port.

At this point the manufacturer was consulted. The TX designer revealed the fact that this transmitter did not contain a true non-linear power amplifier. Rather, a linear PA was used and driven partially into saturation. This strategy provided them with the ability to relax internal baseband generator and modulator symmetry requirements, and control spectrum regrowth by adjusting PA input backoff. Their position was, that this strategy was legitimate as along as all specifications were met in the end. Indeed, this unit did meet all specifications and was accepted as a good overall design.

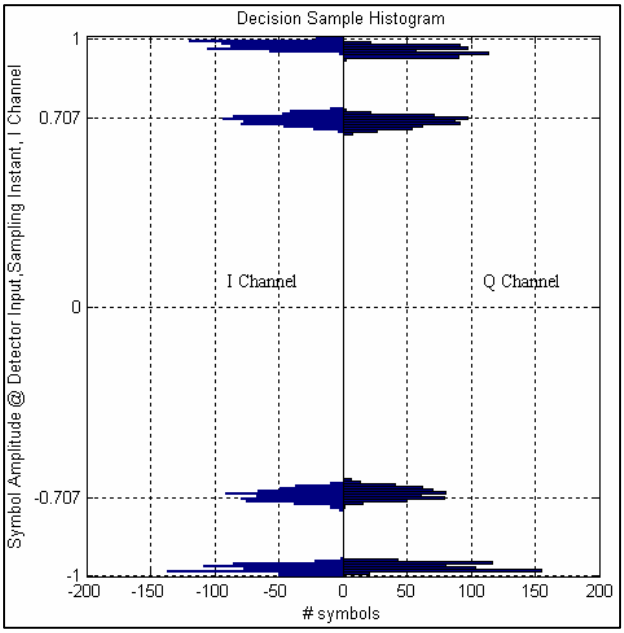

Figure F-11. Decision sample histogram.

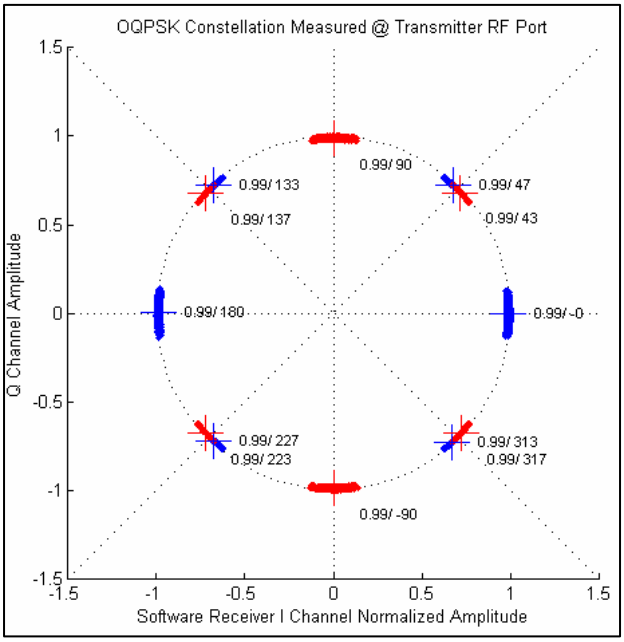

Figure F-12. OQPSK Constellation measured at transmitter RF port.

Finally, we return to Figure F-8 and note the 3 circled data points. These are data from a conventional AWGN BEP test with a benchmark commercial SH demodulator. They are in good agreement with this technique.

8.1 Variant Identification

When faced with the need to determine or confirm which CE OQPSK variant is implemented within a given transmitter, the T1MA is probably the only reliable experimental method. Given reasonable TX signal quality to begin with, it is easy to distinguish an SOQPSK-TG signal from the FQPSKs. Figure F-12 is the measured constellation from an S-band CE OQPSK TX operating at 1 Mb/s. Note that TV magnitudes are nearly perfect and that TV angle symmetry is nearly perfect. However, is this constellation from an FQPSK-X TX with excessive noise in the outer TVs or an SOQPSK-TG signal? To answer this question we look at carrier phase. Figure F-13 shows the carrier phase deviation history of this sample. There are no obvious systematic differences between the reference waveform and the TUT, just a large variance in individual paths. The definitive answer is contained in Figure F-14, the power spectrum of phase deviation. The shallow notch in this spectrum at approximately 0.25 x bit rate is peculiar to SOQPSK-TG and appears in linear and NLA cases.

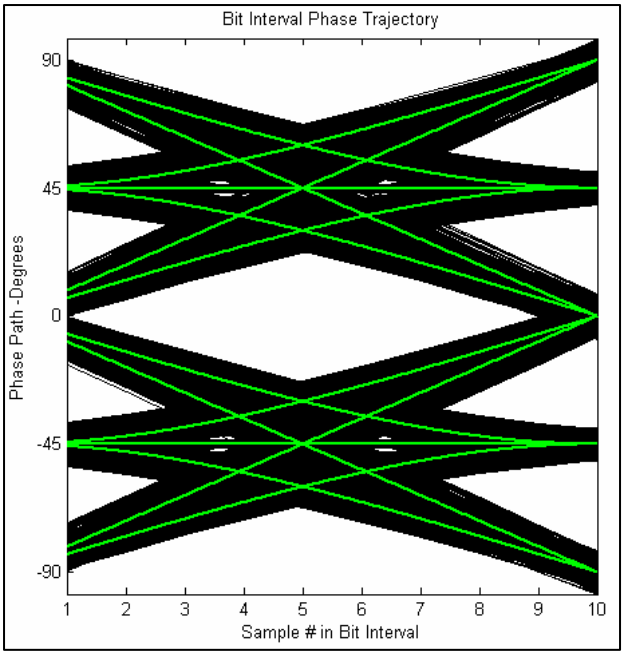

Figure F-13. Bin interval phase trajectory.

Distinguishing between FQPSK-B and FQPSK-JR is very subtle and generally unreliable in the presence of normal TX internal noise.

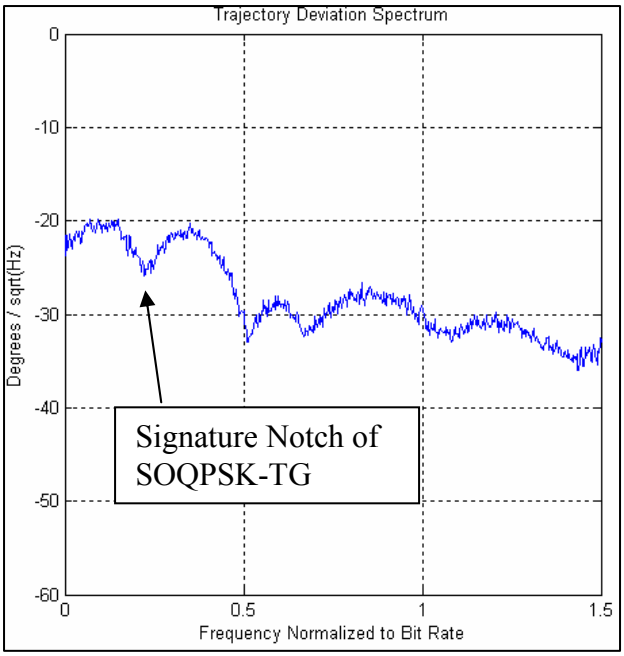

Figure F-14. Trajectory deviation spectrum.

9.1 Analyzer Limitations

T1MA sample blocks normally span only 10 msec of time. Such short snapshots of TX signals will necessarily fail to catch anomalies associated with transient behavior and periodic problems with periods exceeding the sampling interval.

While the analyzer may predict an irreducible BEP floor in some cases, the absence of such a prediction does not guarantee that one may not exist when the TX is used with a real demodulator. This limitation also results from the short sample intervals.

10.1 Summary

The off-line CE OQPSK signal analyzer is applicable to all of the CE OQPSK variants addressed in reference [2] and has proven itself to be a useful supplement to conventional transmitter testing procedures. Many labs already own high speed digitizing oscilloscopes. The only special requirement for this particular tool is an appropriate license for Matlab software and a reasonably high-speed personal computer. An experienced user who is also familiar with the underlying modulation methods will find that the data products can readily point to a number of defect sources not discernable from conventional test data.

11.1 References for Appendix F

[1] Jefferis R. P., "FQPSK-B Baseband Filter Alternatives", *Proceedings of International Telemetering Conference*, San Diego, California, October 21-24, 2002.

[2] "Document 106-04, Telemetry Standards", Secretariat, Range Commander's Council, U.S. Army White Sands Missile Range, New Mexico, May 2004.

[3] Tsou H., Darden S., and Yan T.-Y, "An Off-line Coherent FQPSK-B Reference Receiver", *Proceedings of the International Telemetering Conference*, San Diego, California, October 23-26, 2000.

[4] Lee D., Simon M.K., and Yan T.-Y, "Enhanced Performance of FQPSK-B Receiver Based on Trellis Coded Viterbi Demodulation", Appendix A, *Proceedings of International Telemetering Conference*, San Diego, California, October 23-26, 2000.

[5] Proakis J.G., Digital Communications, 4th edition, McGraw Hill, New York, New York, 2001.

[6] Simon M.K., and Yan T.-Y, , Performance Evaluation and Interpretation of Unfiltered Feher-Patented Quadrature Phase Shift Keying (FQPSK)", JPL TMO Progress Report 42-137, May 1999.

INDEX OF TESTS

Test	Page
Binary Time Verification Test	6-11
Calibration Check - Electrical-Substitution Calibration of Systems with Thermoelectric Transducers Test	1-23
Calibration Check - Electrical-Substitution Calibration of Systems with Transducers Using Integral Electronics Test	1-24
Calibration Check - Electrical-Substitution Calibration of Systems with Transducers Using Reactive Elements (Capacitors or Inductors) Test	1-23
Calibration Check - Measurand Methods	1-4
Calibration Check - Substitute-Measurand Calibration of Systems with ServoTransducers Test	1-22
Center Frequency and Frequency Stability Test (Digital Transmitters)	5-75
Common Mode Rejection and Common Mode Voltage Level Test	3-4
Composite Output Format Test	6-3
Deviation Sense and Transition Threshold Test (Digital Transmitters)	5-83
Distortion Test	2-13
Dynamic Calibration Check	1-6
Efficiency Test	4-4
Electrical-Substitution Calibration for Resistance Bridges Test	1-9
Electrical-Substitution Calibration of Systems with Piezoelectric Transducers Test	1-16
Error Test	6-5
Eye Pattern Response Test (Digital Transmitters)	5-87
Flashlamp Test	B-1
Frame Time Format Test	6-10
Frequency Deviation Test (Digital Transmitters)	5-79
Frequency Response Test	2-7, 3-13
Functional Check Test	7-1
Gain (dc) Test	3-8
Gain Stability (dc) with Temperature Test	3-10
Gain Stability with Source Capacitance Test	2-5
Gain Stability with Temperature Test	2-6
Gain Test	2-4
Ground Isolation Test	5-52
Harmonic Distortion Test	3-20
Incidental Amplitude Modulation Test	5-10
Incidental Frequency Modulation Test	5-56
Input Impedance, Differential Test	3-3
Inter-message Gap Time Test	6-8
Line Regulation Test	4-1
Linearity (dc) Test	3-6
Load Mismatch Test	5-3
Load Regulation Test	4-2
Load Transient Recovery Test	4-6

Message Time Tag Test 6-12
Modulation (ac) Linearity Test 5-14
Modulation (dc) Linearity Test 5-17
Modulation Frequency Response Test 5-31
Modulation Input Impedance Test 5-21
Modulation Sensitivity Test 5-24
Noise Test 3-18
Occupied Bandwidth and –25-dBm Bandwidth Test 5-94
Output Impedance Test 2-9, 3-21
Overflow Test 6-6
Overload Recovery Test 2-3, 3-17
Periodic and Random Deviation (PARD) Test 4-9
Phase Response Test 2-8
Pressure Transducer Thermal Transient Test B-1
Primary Power Reversal Test 5-45
Primary Power Ripple Test 5-54
Primary Power Voltage and Low Voltage Recovery Test 5-42
Pulse Response Characteristics Test 5-61
Recorder Output Format Test 6-1
Residual Noise Test 2-11
Response Time Test 6-9
Reverse Conversion Test 5-70
RF Output Open and Short Circuit Protection Test 5-7
Settling Time Test 3-16
Slew Rate Test 3-14
Spectral Mask Test 5-102
Spectral Occupancy Test (Digital Transmitters) 5-91
Spurious Emissions Test 5-39
Stability (Drift) Test 4-8
Stability with Temperature and Power Variations Test 5-48
Substitute Measurand Calibration of Systems with Piezoelectric Transducers Test 1-16
Temperature Coefficient Test 4-10
Transmitter Bit Error Probability versus Eb/N0 5-108
Transmitter Phase Noise Test 5-104
Turn-On and Turn-Off Characteristics Test 5-64
Two-Tone Intermodulation Test 5-67
User Word Test 6-7
Voltage-Insertion Calibration for Potentiometric Transducers Test 1-8
word structure 6-6
Zero Stability with Temperature Test 3-11